CONVEYOR CHAINS

1. CHAIN CONSTRUCTION

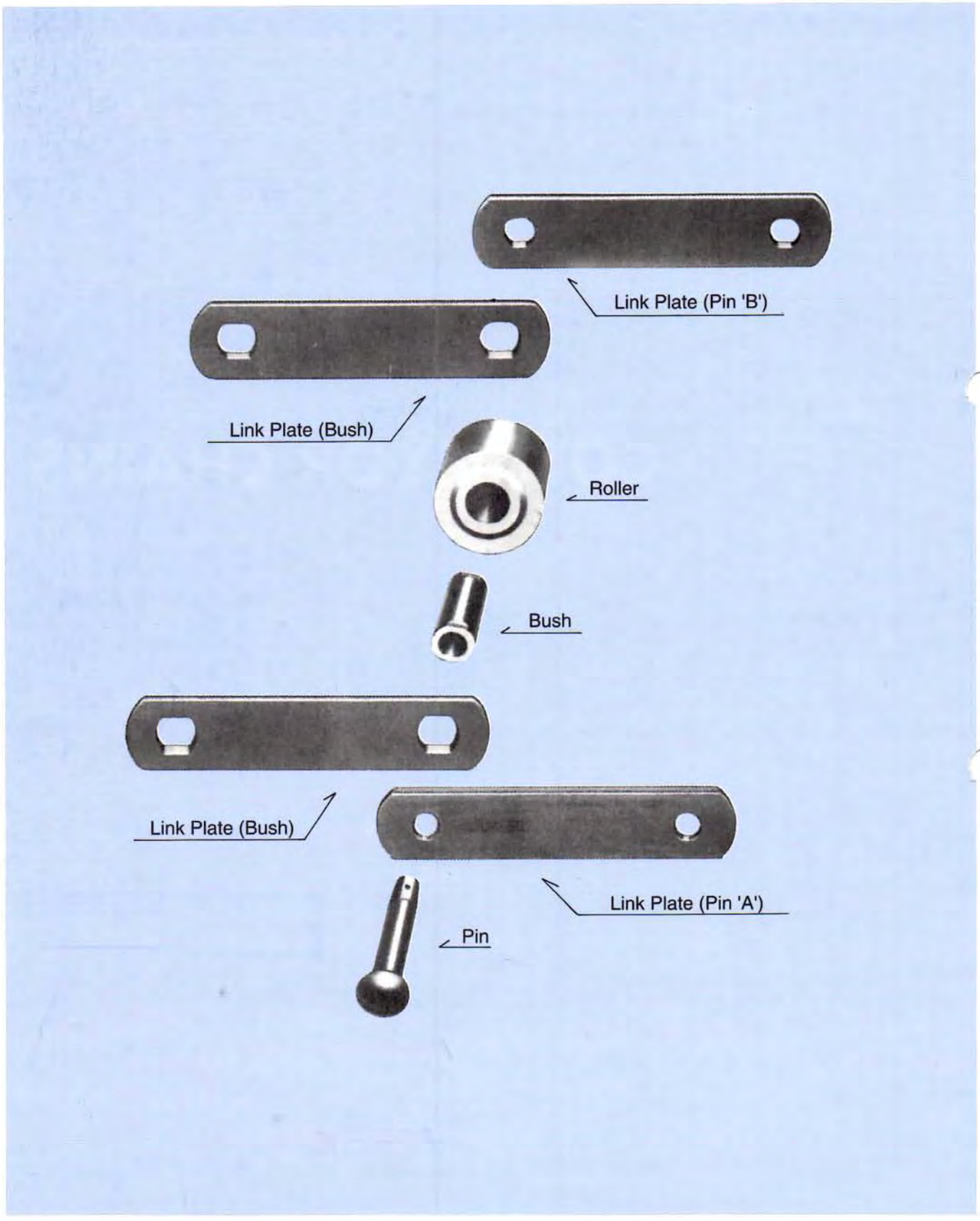

■ Products

BC-type S-Roller Chain

The roller diameter is smaller than the height of the link plate. This type of chains is used for bucket elevator systems to protect sprocket teeth and chain busing.

BC-type R-Roller Chain

The roller diameter is greater than the height of the link plate. This most basic type of chains is used for small and medium-sized horizontal or inclined conveyors.

BC-type F-Roller Chain

These chains with flanged R-type rollers use a rail to be guided. This type of chains is used mainly for large horizontal or inclined conveyors.

BC-type Bushed Chain

These rollerless RF-type chains are used for such conveyors as trolley conveyors.
They are designed to carry loads with a separate roller attached, while the chain only has to transmit the pull.

2. TYPES OF CHAINS

A Attachment

These attachments have bent link plate attachable to only one side of the chain. A_1, A_2, and A_3 indicate attachments with one, two, and three bolt holes respectively.

K Attachment

These attachments have bent link plate attachable to both sides of the chain. K_1 and K_2 indicate attachments with one and two bolt holes respectively.

G Attachment

These attachments have bolt holes on one side of the link plate. G_2 and G_4 indicate attachments with two and four bolt holes respectively.

Flow Conveyor Chain Attachment

There are a variety of standard types and special types including L, KL, U, W, and B.
These attachments are welded to link plates.

Heavy-duty Offset Sidebar Chain

These chains are used for the drive lines of heavy-duty civil engineering and construction equipment.

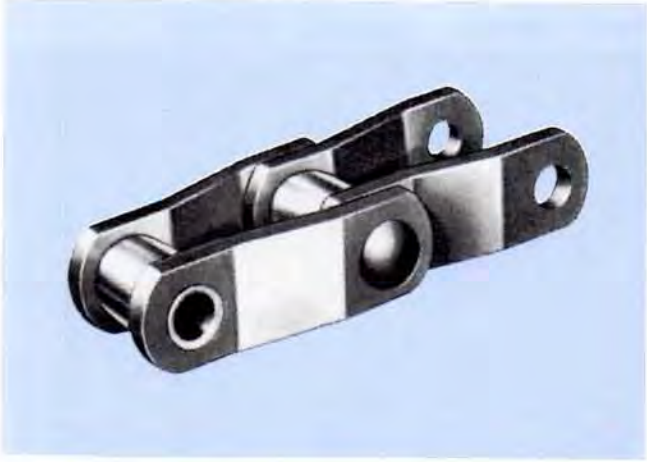

Overhead Trolley Chain

These chains for conveyors to utilize space in plants include TR348, 458, 678, NZ-75, and other variations.

Other Conveyor Chains

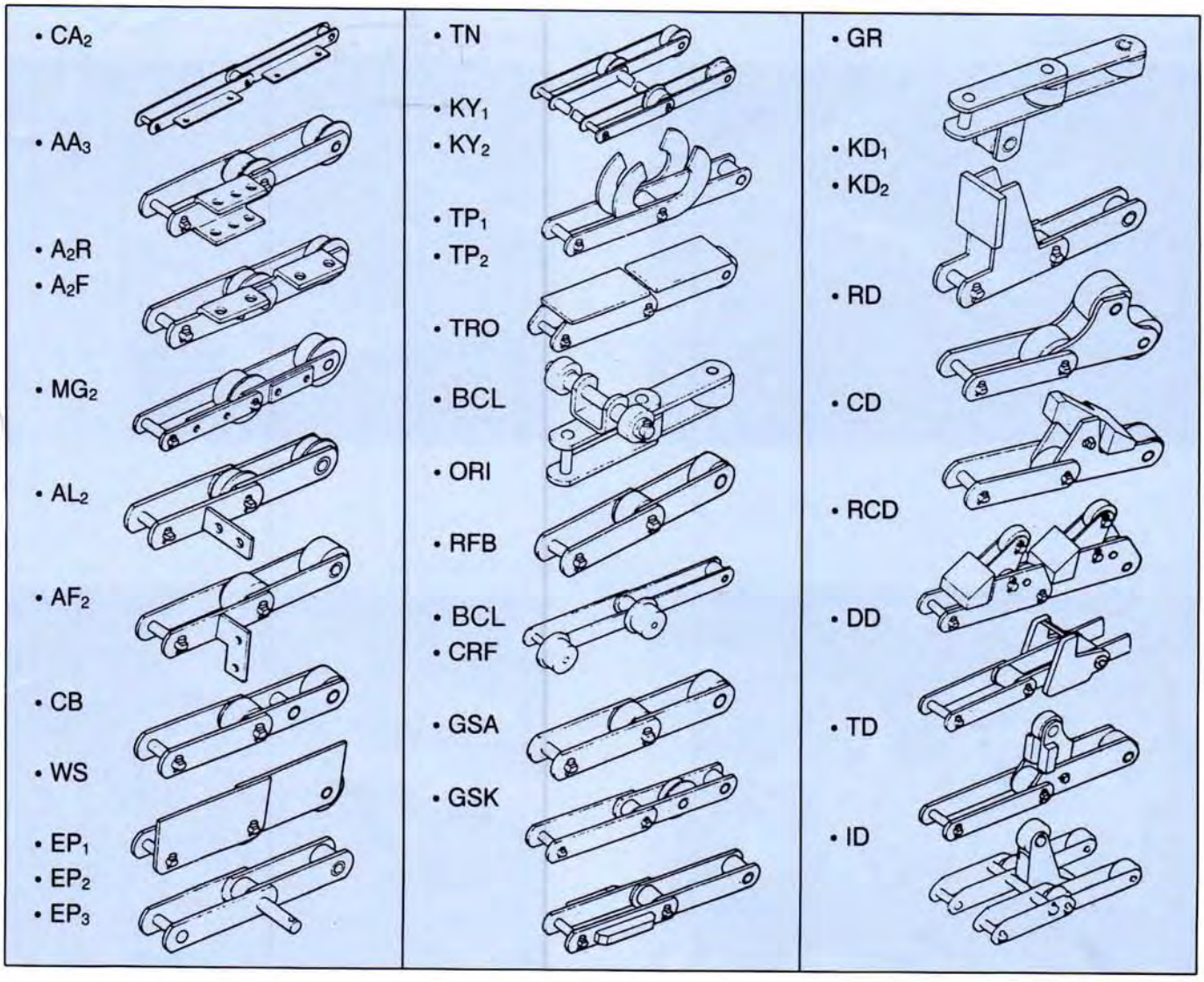

EXAMPLES OF APPLICATIONS

Bucket Elevator

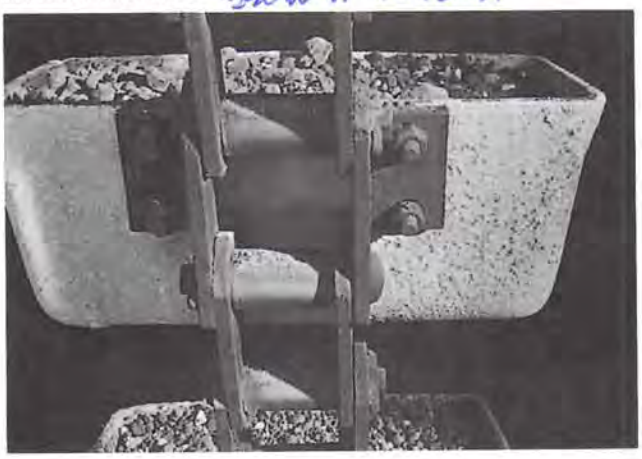

Bucket Elevator

Flow Conveyor

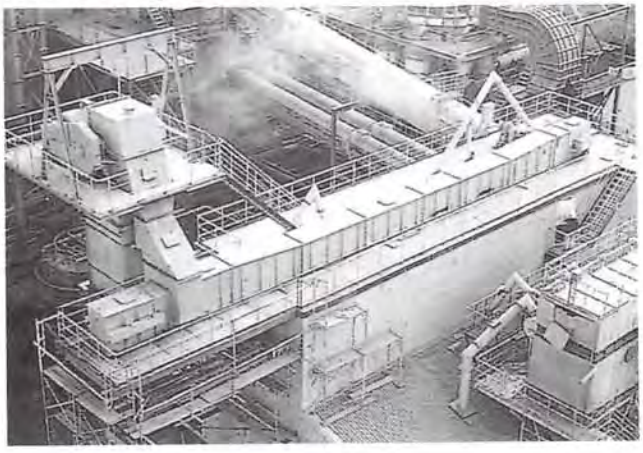

Flow Conveyor

Case Conveyor

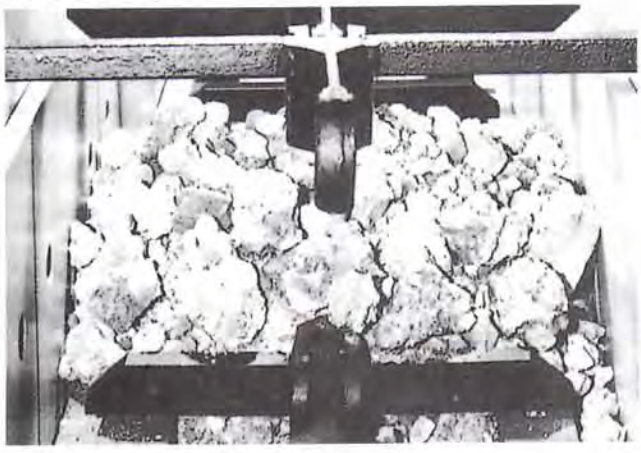

Case Conveyor

■ Average Ultimate Strength

(kg)

Chain No.	Standard Series	Heavy Series	400 Stainless Steel Series		300 Stainless Steel Series	Stainless Steel, Abrasion Resistant Series	Abrasion Resistant Series	Applied Series
	A	AA	S_4	SH	S_3	BB	CA · CB	W_2 · W_6
BC 03000	3,000	7,100	3,500	5,500	3,400	5,200	3,800	7,100
BC 430	5,500	10,000	5,300	8,500	4,900	7,100	5,800	10,000
BC 05000	7,000	14,500	7,200	11,000	7,000	10,000	7,900	14,500
BC 204	8,000	14,500	8,000	12,500	7,000	10,000	8,800	14,500
BC 450	8,000	14,500	8,000	12,500	7,000	10,000	8.800	14,500
BC 08000	8,000	14,500	8,000	12,500	7,000	10,000	8,800	14,500
BC 650	8,000	14,500	14,000	14,500	7,000	10,000	14,500	14,500
BC 10000	11,500	23,000	11,500	18,000	11,000	23,000	12,500	23,000
BC 214	13,000	24,500	12,000	19,000	12,500	24,500	13,000	24,500
BC 205	13,000	24,500	12,000	19,000	12,500	24,500	13,000	24,500
BC 6205	19,000	28,500	17,000	25,000	13,500	28,500	19,000	28,500
BC 12000	19,000	28,500	17,000	25,000	13,500	28,500	19,000	28,500
BC 212	25,000	39,500	22,500	36,500	19,000	39,500	21,000	39,500
BC 17000	25,000	39,500	22,500	36,500	19,000	39,500	25,000	39,500
BC 26000	32,000	53,000	30,000	47,000	25,500	53,000	32,000	53,000
BC 36000	48,500	69,500	–	–	–	69,500	48,500	69,500
BC 52000	54,000	105,000	–	–	–	105,000	54,000	105,000
BC 60000	62,000	106,000	–	–	–	106,000	62,000	106,000
BC 90000	95,000	166,000	–	–	–	166,000	95,000	166,000
BC 120000	113,000	225,000	–	–	–	225,000	113,000	225,000

4. STANDARD CONVEYOR CHAIN DIMENSIONS
(Roller Type: S-R, M-R, R-R, F-R)

• Chain Numbering System

BC 12200 S A2 1/1

- 1/1 — Attachment Interval
- A2 — Type of Attachment
- S — Type of Roller
- 12200 — Chain Standard
- BC — Type of Chain

• S-Roller (M.N)

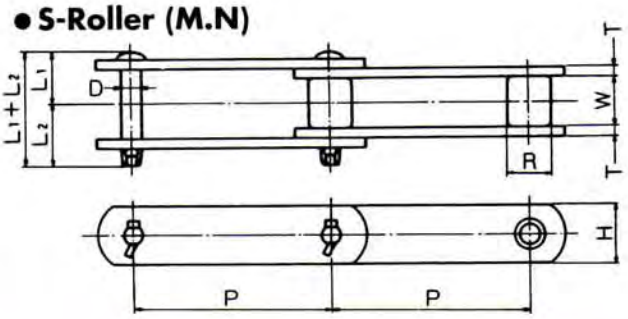

Chain No.	Type of Roller	Average Ultimate Strength (kg)		Pitch P	Roller									
					S		M		N		R		F	
		Standard Series	Heavy Series		R	E	R	E	R	E	R	E	R	F
BC 03075 BC 03100 BC 03150 BC 03200	R. F. S. R. F. S. R. F. S. R. F. S.	3,000	7,100	75 100 150 200	15.9	15.4	·	·	·	·	31.75	15.5	31.75	42
BC 430	R. S.	5,500	10,000	101.6	20.1	21.6	·	·	·	·	38.1	19	·	·
BC 05075 BC 05100 BC 05125 BC 05150	R. S. R. F. S. R. F. S. R. F. S.	7,000	14,500	75 100 125 150	22.2	21	·	·	·	·	40	19	40	50
BC 204	S.	8,000	14,500	66.27	22.2	26	25.4	26	·	·	·	·	·	·
BC 450	R. F. S. M.	8,000	14,500	101.6	22.2	26	25.4	26	·	·	44.5	23	44.5	55
BC 08125 BC 08150 BC 08200	R. F. S. M.	8,000	14,500	125 150 200	22.2	26	25.4	26	·	·	44.5	23	44.5	55
BC 650	R. F. S. M.	8,000	14,500	152.4	25.4	29.2	31.75	29.2	·	·	50.8	26	50.8	65
BC 10100 BC 10125 BC 10150 BC 10200 BC 10250 BC 10300	R. S. M. R. F. S. M. R. F. S. M. R. F. S. M. R. F. S. M. R. F. S. M.	11,500	23,000	100 125 150 200 250 300	29	29	31.75	29	·	·	50.8	27	50.8	65
BC 214	R. S. M.	13,000	24,500	101.6	31.75	30.3	34.9	30.3	·	·	44.5	28.3		
BC 205	S.	13,000	24,500	78.11	31.75	36	·	·	·	·	·	·	·	·
BC 6205	R. F. S. M.	19,000	28,500	152.4	34.9	36	38.1	36	·	·	57.2	32	57.2	70
BC 12200 BC 12250 BC 12300	R. F. S. M.	19,000	28,500	200 250 300	34.9	36	38.1	36	·	·	65	32	65	80
BC 17200 BC 17250 BC17300	R. F. S. M. R. F. S. M. R. F. S. M.	25,000	39,500	200 250 300	40.1	50	44.5	50	·	·	80	44	80	100
BC 212	R. S. M.	25,000	39,500	152.4	40.1	50	44.5	36	·	·	69.9	32.5	·	
BC 26200 BC 26250 BC 26300 BC 26450	S. M. R. F. S. M. R. F. S. M. R. F. S. M.	32,000	53,000	200 250 300 450	44.5	55.5	50.8	55.5	·	·	100	50	100	125
BC 36200 BC 36250 BC 36300 BC 26450 BC 36600	S. M S. M. R. F. S. M. R. F. S. M. R. F. S. M.	48,500	69,500	200 250 300 450 600	50.8	65	57.2	65	·	·	125	56	125	150
BC 52300 BC 52450 BC 52600	R. F. S. R. F. S. R. F. S.	54,000	105,000	300 450 600	57.2	75	·	·	·	·	140	65	140	170
BC 60300 BC 60350 BC 60400	R. F. N. R. F. N. R. F. N.	62,000	106,000	300 350 400	·	·		·	· 70	75	140	68	140	170
BC 90350 BC 90400 BC 90500	N. R. F. N. R. F. N.	95,000	166,000	350 400 500	·	·	·	·	85	86	170	76	170	205
BC 120400 BC 120600	R. N. R. F. N.	113,000	225,000	400 500	·	·	·	·	100	97	200	87	200	240

● R-Roller

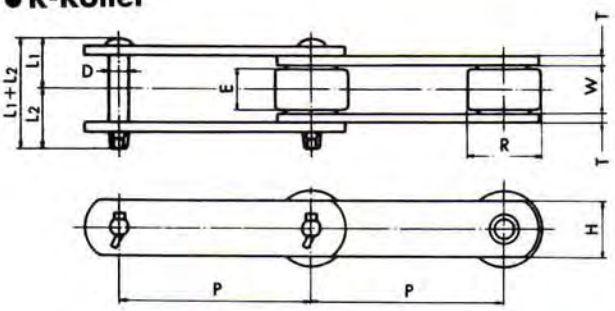

● F-Roller

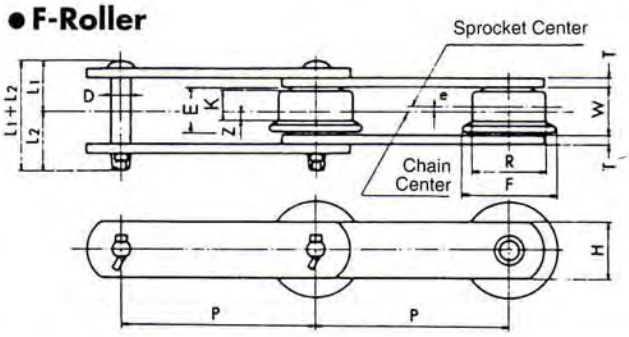

				Inner Width	Link Plate		Pin				Bush Bore	Weight (kg/m)			
E	K	e	Z	W	T	H	D	L_1	L_2	L_1+L_2	Note	S	M.N	R	F
15.4	12	1.8	4.2	16.1	3.2	22	7.9	17.5	19.5	37	11.1	1.9 1.7 1.5 1.3	·	2.7 2.3 2.0 1.6	2.8 2.4 2.1 1.8
·	·	·	·	22.6	4.8(5.0)	25.4	9.7	25.5	29.5	55	14.3	3.0	·	4.3	·
21	14	2.5	4.5	22	4.5	32	11.1	24.6	29.6	54.2	15.9	4.2 3.7 3.5 3.2	·	5.0 4.5 4.3 4.1	5.2 4.6 4.4 4.2
·	·	·	·	27	6.3(6.0)	28.6	11.1	30.65	35.65	66.3	15.9	5.6	·	·	·
26	18	2.5	6.5	27	6.3(6.0)	28.6	11.1	30.65	35.65	66.3	15.9	4.6	4.8	6.8	7.5
26	18	2.5	6.5	27	6.3(6.0)	28.6	11.1	30.65	35.65	66.3	15.9	4.3 4.0 3.6	4.5 4.2 3.8	6.1 5.5 4.8	6.3 5.8 5.2
29.2	20	3	7	30.2	6.3(6.0)	38.1	11.1	32.3	37.3	69.6	15.9	6.0	6.4	7.7	8.0
29	20	3	7	30	6.3(6.0)	38.1	14.3	32.7	39.2	71.9	20	6.8 6.3 5.9 5.3 4.9 4.7	7.1 6.5 6.1 5.5 5.1 4.9	9.8 8.7 7.9 6.8 6.2 5.8	10.5 8.9 8.1 7.2 6.4 6
·	·	·	·	31.6	7.9	38.1	15.9	37.2	43.7	80.9	22.2	8.7	9.1	10.4	·
·	·	·	·	37.1	7.9	38.1	15.9	39.95	46.45	86.4	22.2	10.4	·	·	·
36	25	3.5	9	37.1	7.9	44.5	15.9	39.95	46.45	86.4	22.2	9.3	9.6	12.1	12.4
36	24	4	8	37.1	7.9	44.5	15.9	39.95	46.45	86.4	22.2	8.4 7.8 7.2	8.7 8.0 7.3	11.4 10.3 9.2	11.9 10.6 9.3
50	34	5	12	51.4	9.5(10.0)	50.8	19.05	51.5	60	111.5	28.6	12.0 11.1 10.5	12.6 11.6 10.9	18.8 16.5 15.0	19.8 17.3 15.7
·	·	·	·	37.1	9.5(10.0)	50.8	19.05	44.15	52.65	96.8	28.6	12.6	13.1	17.1	·
55.5	38	6	13	57.2	9.5(10.0)	63.5	22.2	55.2	62.7	117.9	31.75	16.0 14.7 13.8 12.4	17.0 15.5 14.5 12.9	· 25.3 22.3 18.0	· 26.2 23.6 18.9
65	42	7	14	66.7	12.7	76.2	25.4	67.55	75.55	143.1	38.1 ★40	25.9 24.4 22.9 20.2 18.0	27.2 25.5 23.8 20.8 19.5	39.0 30.7 26.9	40.1 31.9 27.8
·	49	8	16.5	77	16	76.2	31.75	82.5	93	175.5	47.5	29.7 26.2 24.4	· · ·	48.8 37.5 32.9	52.5 39.3 34.3
75	49	8	16.5	77	12.7	90	35	76.9	83.9	160.8	50.8	· · ·	31.0 28.8 27.7	52.4 47.2 43.8	55.1 49.5 45.8
·	56	10	18	88	16	110	42.0	89.5	100	189.5	63.5	· ·	42.4 40.8 38.1	· 66.9 59.0	· 71.6 62.8
·	64	11.5	20.5	100	19	130	50.0	105.5	113	218.5	75	· ·	63.9 55.4	105.7 83.3	· 88.0

5. DIMENSIONS OF ATTACHMENTS

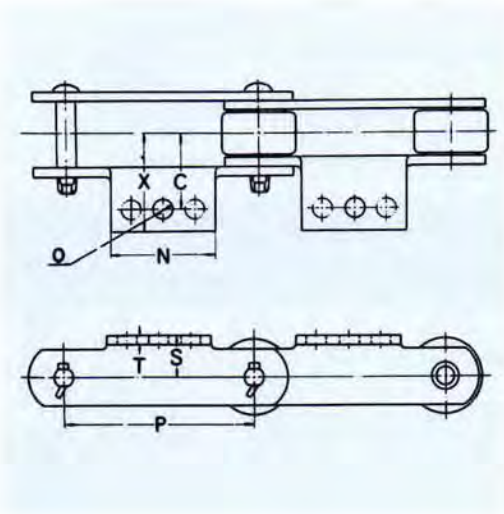

● A1 Attachment

Chain No.	Type of Roller	P	S	C	X	N	T	O	Bolt	Additional Weight (kg/pc)
BC 03075	R.F.S	75	20	30	46	55	3.2	10	M8	0.05
BC 03100	R.F.S	100				65				0.06
BC 430	R.S	101.6	22	40	54	70	4.8(5.0)	12	M10	0.11
BC 05075	S	75	22	35	47	55	4.5	10	M8	0.03
BC 05100	R.F.S	100				65				0.08
BC 05125	R.F.S	125				75				0.09
BC 05150	R.F.S	150				85				0.10
BC 204	S	66.27	24	45	59	35	6.3(6.0)	12	M10	0.08
BC 450	R.F.S.M	101.6	28	50	64	70	6.3(6.0)	12	M10	0.18
BC 08150	R.F.S.M	150	28	50	64	90	6.3(6.0)	12	M10	0.22
BC 650	R.F.S.M	152.4	32	50	64	90	6.3(6.0)	12	M10	0.22
BC 10100	R.S.M	100	28	50	65	70	6.3(6.0)	12	M10	0.16
BC 10125	R.F.S.M	125				75				0.17
BC 10150	R.F.S.M	150				90				0.20
BC 10200	R.F.S.M	200				120				0.28
BC 214	R.S.M	101.6	35	55	73	80	7.9	15	M12	0.28
BC 6205	R.F.S.M	152.4	38	60	79	100	7.9	15	M12	0.37
BC 12200	R.F.S.M	200	38	60	79	120	7.9	15	M12	0.45
BC 12250	R.F.S.M	250				165				0.62
BC 212	R.S.M	152.4	45	65	83	100	9.5(10.0)	15	M12	0.49
BC 17200	R.F.S.M	200	45	75	98	120	9.5(10.0)	15	M12	0.66
BC 17250	R.F.S.M	250				165				0.79
BC 17300	R.F.S.M	300				220				1.34

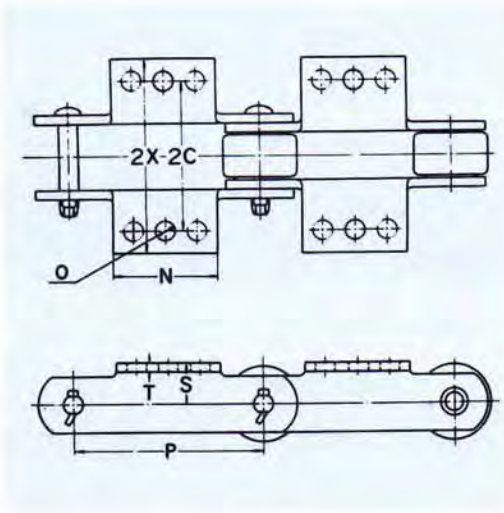

● K1 Attachment

Chain No.	Type of Roller	P	S	2C	2X	N	T	O	Bolt	Additional Weight (kg/pc)
BC 03075	R.F.S	75	20	60	92	55	3.2	10	M8	0.10
BC 03100	R.F.S	100				65				0.12
BC 430	R.S	101.6	22	80	108	70	4.8(5.0)	12	M10	0.22
BC 05075	S	75	22	70	94	55	4.5	10	M8	0.06
BC 05100	R.F.S	100				65				0.16
BC 05125	R.F.S	125				75				0.18
BC 05150	R.F.S	150				85				0.20
BC 204	S	66.27	24	90	118	35	6.3(6.0)	12	M10	0.16
BC 450	R.F.S.M	101.6	28	100	128	70	6.3(6.0)	12	M10	0.36
BC 08150	R.F.S.M	150	28	100	128	90	6.3(6.0)	12	M10	0.44
BC 650	R.F.S.M	152.4	32	100	128	90	6.3(6.0)	12	M10	0.44
BC 10100	R.S.M	100	28	100	130	70	6.3(6.0)	12	M10	0.32
BC 10125	R.F.S.M	125				75				0.34
BC 10150	R.F.S.M	150				90				0.40
BC 10200	R.F.S.M	200				120				0.56
BC 214	R.S.M	101.6	35	110	146	80	7.9	15	M12	0.56
BC 6205	R.F.S.M	152.4	38	120	158	100	7.9	15	M12	0.74
BC 12200	R.F.S.M	200	38	120	158	120	7.9	15	M12	0.90
BC 12250	R.F.S.M	250				165				1.24
BC 212	R.S.M	152.4	45	130	166	100	9.5(10.0)	15	M12	0.98
BC 17200	R.F.S.M	200	45	150	196	120	9.5(10.0)	15	M12	1.32
BC 17250	R.F.S.M	250				165				1.58
BC 17300	R.F.S.M	300				220				2.68

※ Parenthesized numbers are thickness of stainless steel link plates.

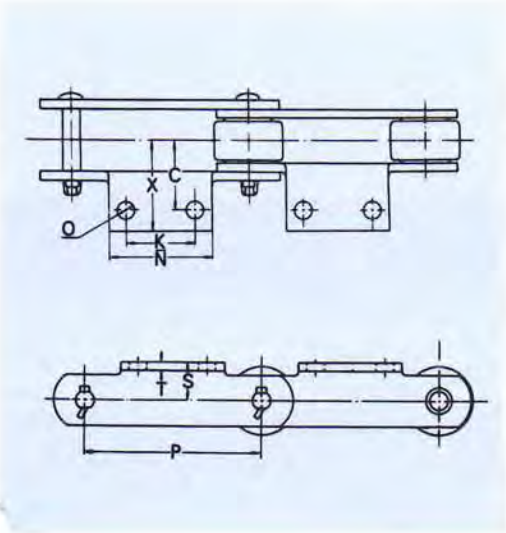

● A2 Attachment

Chain No.	Type of Roller	P	S	C	X	N	K	T	O	Bolt	Additional Weight (kg/pc)
BC 03075	R·F·S	75	20	30	46	55	30	3.2	10	M 8	0.05
BC 03100	R·F·S	100				65	40				0.06
BC 430	R·S	101.6	22	40	54	70	40	4.8(5.0)	12	M10	0.11
BC 05075	S	75	22	35	47	55	30	4.5	10	M 8	0.07
BC 05100	R·F·S	100				65	40				0.08
BC 05125	R·F·S	125				75	50				0.09
BC 05150	R·F·S	150				85	60				0.10
BC 204	S	66.27	24	45	59	55	35	6.3(6.0)	12	M10	0.13
BC 450	R·F·S·M	101.6	28	50	64	70	40	6.3(6.0)	12	M10	0.18
BC 08150	R·F·S·M	150	28	50	64	90	60	6.3(6.0)	12	M10	0.22
BC 650	R·F·S·M	152.4	32	50	64	90	60	6.3(6.0)	12	M10	0.22
BC 10100	R·S·M	100	28	50	65	70	40	6.3(6.0)	12	M10	0.16
BC 10125	R·F·S·M	125				75	50				0.17
BC 10150	R·F·S·M	150				90	60				0.20
BC 10200	R·F·S·M	200				120	80				0.28
BC 214	R · S · M	101.6	35	55	73	80	40	7.9	15	M12	0.28
BC 205	S	78.11	35	60	75	65	30	7.9	12	M10	0.23
BC 6205	R·F·S·M	152.4	38	60	79	100	60	7.9	15	M12	0.37
BC 12200	R·F·S·M	200	38	60	79	120	80	7.9	15	M12	0.45
BC 12250	R·F·S·M	250				169	125				0.62
BC 212	R·S·M	152.4	45	65	83	100	60	9.5(10.0)	15	M12	0.49
BC 17200	R·F·S·M	200	45	75	98	120	80	9.5(10.0)	15	M12	0.66
BC 17250	R·F·S·M	250				165	125				0.79
BC 17300	R·F·S·M	300				220	180				1.34
BC 26200	S·M	200	55	80	108	120	80	9.5(10.0)	15	M12	0.78
BC 26250	R·F·S·M	250	55	80	108	165	125	9.5(10.0)	15	M12	1.07

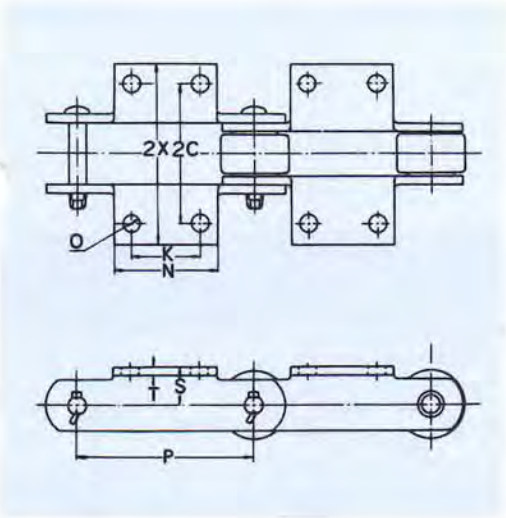

● K2 Attachment

Chain No.	Type of Roller	P	S	2C	2X	N	K	T	O	Bolt	Additional Weight (kg/pc)
BC 03075	R·F·S	75	20	60	92	55	30	3.2	10	M 8	0.10
BC 03100	R·F·S	100				65	40				0.12
BC 430	R·F·S	101.6	22	80	108	70	40	4.8(5.0)	12	M10	0.22
BC 05075	S	75	22	70	94	55	30	4.5	10	M 8	0.14
BC 05100	R·F·S	100				65	40				0.16
BC 05125	R·F·S	125				75	50				0.18
BC 05150	R·F·S	150				85	60				0.20
BC 204	S	66.27	24	90	118	55	35	6.3(6.0)	12	M10	0.26
BC 450	R·F·S·M	101.6	28	100	128	70	40	6.3(6.0)	12	M10	0.36
BC 08150	R·F·S·M	150	28	100	128	90	60	6.3(6.0)	12	M10	0.44
BC 650	R·F·S·M	152.4	32	100	128	90	60	6.3(6.0)	12	M10	0.44
BC 10100	R·S·M	100	28	100	130	70	40	6.3(6.0)	12	M10	0.32
BC 10125	R·F·S·M	125				75	50				0.68
BC 10150	R·F·S·M	150				90	60				0.40
BC 10200	R·F·S·M	200				120	80				0.56
BC 214	R·S·M	101.6	35	110	146	80	40	7.9	15	M12	0.56
BC 205	S	78.11	35	120	150	65	30	7.9	12	M10	0.46
BC 6205	R·F·S·M	152.4	38	120	158	100	60	7.9	15	M12	0.74
BC 12200	R·F·S·M	200	38	120	158	120	80	7.9	15	M12	0.90
BC 12250	R·F·S·M	250				165	125				1.24
BC 212	R · S · M	152.4	45	130	166	100	60	9.5(10.0)	15	M12	0.98
BC 17200	R·F·S·M	200	45	150	196	120	80	9.5(10.0)	15	M12	1.32
BC 17250	R·F·S·M	250				165	125				1.58
BC 17300	R·F·S·M	300				220	180				2.68
BC 26200	S·M	200	55	160	216	120	80	9.5(10.0)	15	M12	1.56
BC 26250	R·F·S·M	250	55	160	216	165	125	9.5(10.0)	15	M12	2.14

※ Parenthesized numbers are thickness of stainless steel link plates.

• Welded Attachment

If chain pitch is 300mm or over, weld the angle.

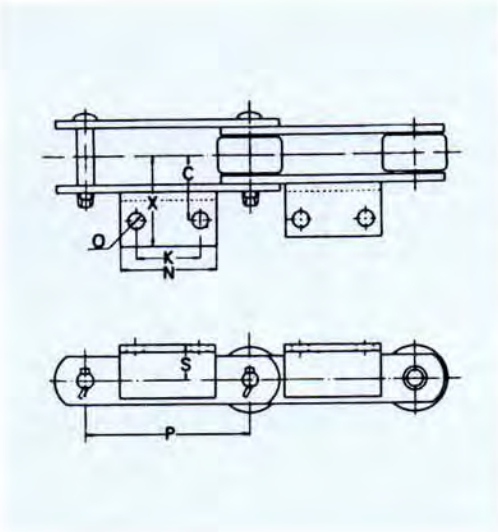

• A_2 Attachment

Chain No.	Type of Roller	P	S	C	X	K	N	O	Angle Size	Bolt	Additional Weight (kg/pc)
BC 17300	R·F·S·M	300	45	75	110.5	180	220	15	L 65× 65× 6	M12	1.34
BC 26300	R·F·S·M	300	55	80	123.5	180	220	15	L 75× 75× 9	M12	2.22
BC 26450	R·F·S·M	450				280	320				3.26
BC 36300	R·F·S·M	300	70	100	160	100	160	19	L100×100×10	M16	2.50
BC 36450	R·F·S·M	450				280	330				5.07
BC 36600	R·F·S·M	600				360	410				6.26
BC 52300	R·F·S	300	80	120	171.4	100	160	24	L100×100×13	M20	3.10
BC 52450	R·F·S	450				280	330				6.30
BC 52600	R·F·S	600				360	410				7.80
BC 60300	R·F·N	300	90	115	165	110	170	24	L100×100×13	M20	3.30
BC 60350	R·F·N	350				160	220				4.20
BC 60400	R·F·N	400				200	260				6.00
BC 90350	N	350	100	140	210	100	180	28	L130×130×15	M24	5.20
BC 90400	R·F·N	400				150	230				6.60
BC 90500	R·F·N	500				260	340				9.80
BC 120400	R·N	400	120	150	220	120	200	28	L130×130×15	M24	5.80
BC 120600	R·F·N	600				320	400				11.50

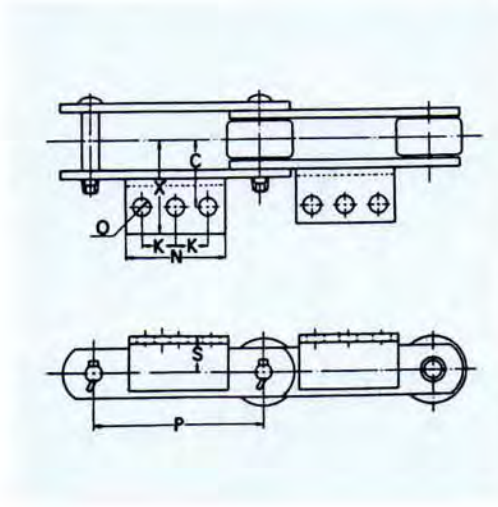

• A_3 Attachment

Chain No.	Type of Roller	P	S	C	X	K	N	O	Angle Size	Bolt	Additional Weight (kg/pc)
BC 26450	R·F·S·M	450	55	80	123.5	140	320	15	L 75× 75× 9	M12	3.26
BC 36450	R·F·S·M	450	70	100	160	140	330	19	L100×100×10	M16	5.07
BC 36600	R·F·S·M	600				180	410				6.26
BC 52450	R·F	450	80	120	171.4	140	330	24	L100×100×13	M20	6.30
BC 52600	R·F	600				180	410				7.80
BC 60350	R·F·N	350	90	115	165	80	220	24	L100×100×13	M20	4.20
BC 60400	R·F·N	400				100	260				6.00
BC 90500	R·F·N	500	100	140	210	130	340	28	L130×130×15	M24	9.80
BC 120600	R·F·N	600	220	150	220	160	400	28	L130×130×15	M24	11.50

• SA_2 Attachment

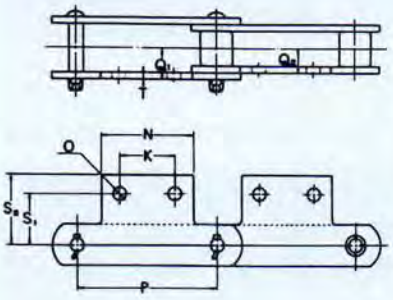

Chain No.	Type of Roller	P	S_1	S_2	Q_1	Q_2	K	N	T	O	Bolt	Additional Weight (kg/pc)
BC 03075	R · S	75	33	49	15.5	11.5	30	55	3.2	10	M 8	0.05
BC 03100	R · S	100					40	65				0.06
BC 430	R · S	101.6	37.6	51.6	22(22.5)	16(16.5)	40	70	4.8(5.0)	12	M10	0.11
BC 05100	R · S	100	33.4	50.7	21	15.5	40	65	4.5	10	M 8	0.08
BC 05125	R · S	125					50	75				0.09
BC 05150	R · S	150					60	85				0.10
BC 450	R · S · M	101.6	47.6	60.7	27(26.5)	20(19.5)	40	70	6.3(6.0)	12	M10	0.18
BC 08150	R · S · M	150	46.1	58.7	27(26.5)	20(19.5)	60	90	6.3(6.0)	12	M10	0.22
BC 650	R · S · M	152.4	50	63	28.5(28)	21.5(21)	60	90	6.3(6.0)	12	M10	0.22
BC 10100	R · S · M	100	46.1	61	28.5(28)	21.5(21)	40	70	6.3(6.0)	12	M10	0.16
BC 10125	R · S · M	125					50	75				0.17
BC 10150	R · S · M	150					60	90				0.20
BC 10200	R · S · M	200					80	120				0.28
BC 214	R · S · M	101.6	50	70	32.5	23.5	40	80	7.9	15	M12	0.28
BC 6205	R · S · M	152.4	55	75.7	35.5	26.5	60	100	7.9	15	M12	0.37
BC 12200	R · S · M	200	55	75.7	35.5	26.5	80	120	7.9	15	M12	0.45
BC 12250	R · S · M	250					125	165				0.62
BC 212	R · S · M	152.4	60	83.6	38(39.5)	28(28.5)	60	100	9.5(10.0)	15	M12	0.49

※ Parenthesized numbers are for stainless steel attachments.

• SK_2 Attachment

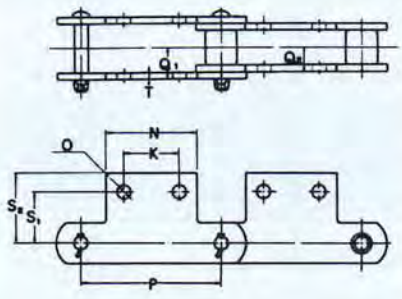

Chain No.	Type of Roller	P	S_1	S_2	Q_1	Q_2	K	N	T	O	Bolt	Additional Weight (kg/pc)
BC 03075	R · S	75	33	49	15.5	11.5	30	55	3.2	10	M 8	0.10
BC 03100	R · S	100					40	65				0.12
BC 430	R · S	101.6	37.6	51.6	22(22.5)	16(16.5)	40	70	4.8(5.0)	12	M10	0.22
BC 05100	R · S	100	33.4	50.7	21	15.5	40	65	4.5	10	M 8	0.16
BC 05125	R · S	125					50	75				0.18
BC 05150	R · S	150					60	85				0.20
BC 450	R · S · M	101.6	47.6	60.7	27(26.5)	20(19.5)	40	70	6.3(6.0)	12	M10	0.36
BC 08150	R · S · M	150	46.1	58.7	27(26.5)	20(19.5)	60	90	6.3(6.0)	12	M10	0.44
BC 650	R · S · M	152.4	50	63	28.5(28)	21.5(21)	60	90	6.3(6.0)	12	M10	0.44
BC 10100	R · S · M	100	46.1	61	28.5(28)	21.5(21)	40	70	6.3(6.0)	12	M10	0.32
BC 10125	R · S · M	125					50	75				0.34
BC 10150	R · S · M	150					60	90				0.40
BC 10200	R · S · M	200					80	120				0.56
BC 214	R · S · M	101.6	50	70	32.5	23.5	40	80	7.9	15	M12	0.56
BC 6205	R · S · M	152.4	55	75.7	35.5	26.5	60	100	7.9	15	M12	0.74
BC 12200	R · S · M	200	55	75.7	35.5	26.5	80	120	7.9	15	M12	0.90
BC 12250	R · S · M	250					125	165				1.24
BC 212	R · S · M	152.4	60	83.6	38(39.5)	28(28.5)	60	100	9.5(10.0)	15	M12	0.98

5. DIMENSIONS OF ATTACHMENTS

● G2 Attachment

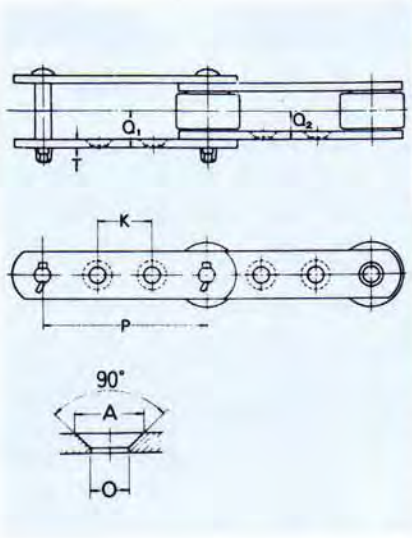

Chain No.	Type of Roller	P	K	T	Q1	Q2	A	O	Maximum Length		Bolt
									Pin Link	Bush Link	
BC 03075	R·S	75	30	3.2	15.2	11.3	13.5	8	26	19	M 6
BC 03100	R·F·S	100	50								
BC 05100	R·S	100	40	4.5	21	15.5	15	10	36	26	M 8
BC 05150	R·F·S	150	60								
BC 08150	R·F·S·M	150	60	6.3	27	20	20	12	45	31	M10
BC 650	R·F·S·M	152.4	60	6.3(6)	28.5(28)	21.5(21)	20	12	49	35	M10
BC 10100	S·M	100	30	6.3(6)	28.5(28)	21.5(21)	20	12	49	35	M10
BC 10150	R·F·S·M	150	60								
BC 6205	R·F·S·M	152.4	50	7.9	35.5	26.5	26	15	63	45	M12
BC 12200	R·F·S·M	200	80	7.9	35.5	26.5	26	15	63	45	M12
BC 12250	R·F·S·M	250	125								
BC 17200	R·F·S·M	200	70	9.5(10.0)	45.5(46.5)	35(35.5)	26	15	81	61	M12
BC 17250	R·F·S·M	250	110								
BC 17300	R·F·S·M	300	150								
BC 26300	R·F·S·M	300	140	9.5(10.0)	48(49)	38(38.5)	26	15	88	67	M12
BC 26450	R·F·S·M	450	220								
BC 36450	R·F·S·M	450	220	12.7	59.5	46	32	19	105	75	M16
BC 36600	R·F·S·M	600	300								
BC 52450	R·F·S	450	200	16	71.5	45.5	38	24	125	90	M20
BC 52600	R·F·S	600	300								

● G4 Attachment

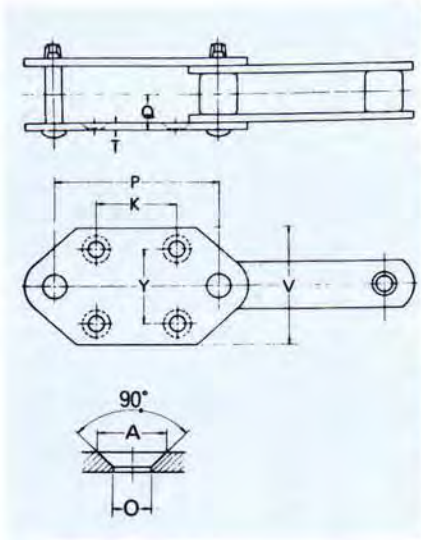

Chain No.	Type of Roller	P	V	K	Y	T	Q	A	O	Bolt	Additional Weight (kg/m)
BC 05100	S	100	80	50	50	4.5	21	15	10	M 8	4.6
BC 05150	S	150		70							4.1
BC 650	S·M	152.4	110	75	70	6.3	28.5	20	12	M10	7.2 (7.6)
BC 10150	S·M	150	110	75	70	6.3	28.5	20	12	M10	7.2 (7.4)
BC 6205	S·M	152.4	110	75	70	7.9	35.5	26	15	M12	11.0 (11.3)
BC 12200	S·M	200	110	100	70	7.9	35.5	26	15	M12	10.2 (10.5)
BC 17200	S·M	200	120	100	80	9.5	45.5	26	15	M12	14.0 (14.6)
BC 17250	S·M	250	150	140	100					M12	14.5 (15.0)
BC 26200	S·M	200	120	100	80	9.5	48	26	15	M12	17.5 (18.5)
BC 26250	S·M	250	150	140	100					M12	17.6 (18.4)
BC 26300	S·M	300	150	180	100					M12	16.7 (17.4)
BC 36250	S·M	250	150	140	100	12.7	60	32	19	M16	27.6 (28.6)
BC 36300	S·M	300		180							26.2 (27.1)

Note) 1. Parenthesized numbers are for stainless steel attachments.
2. Parenthesized weights are for M Rollers.

EXAMPLES OF APPLICATIONS

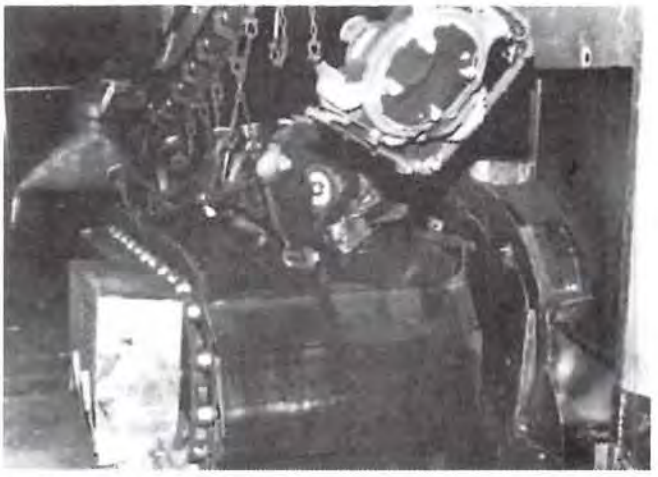

Apron Conveyor Chain used to convey parts

Bucket Conveyor Chain for vertical conveyance of unerectables

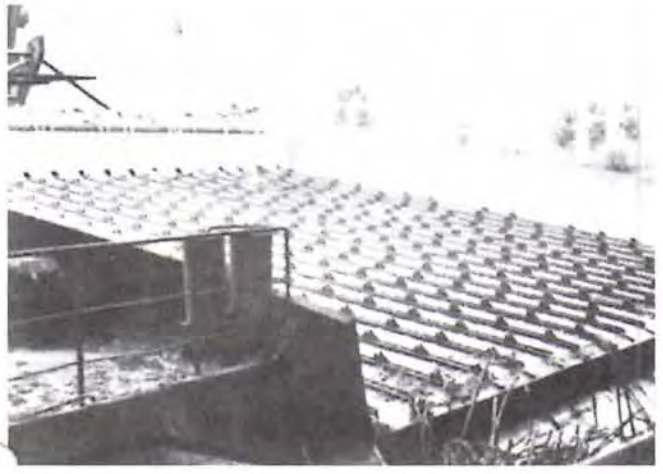

Used to convey steel bars at a steel mill

Used to convey coil

Slat Conveyor Chain for car assembly lines

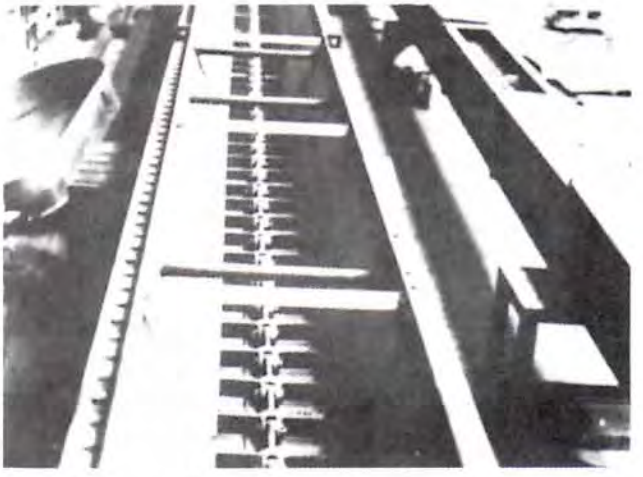

EF Chains used to convey powdery matters

6. BUCKET ELEVATOR CHAINS (TYPE B)

■ Bucket Chain (Type B)

Designed specially to convey corrosives, these chains are dedicated to high speed bucket elevators for cement which require wear resistance.

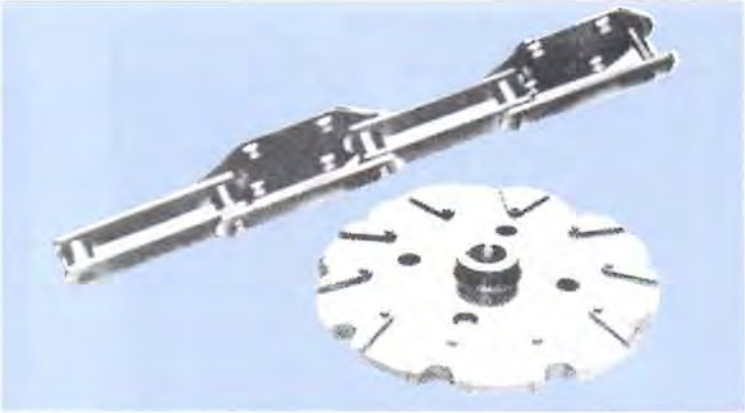

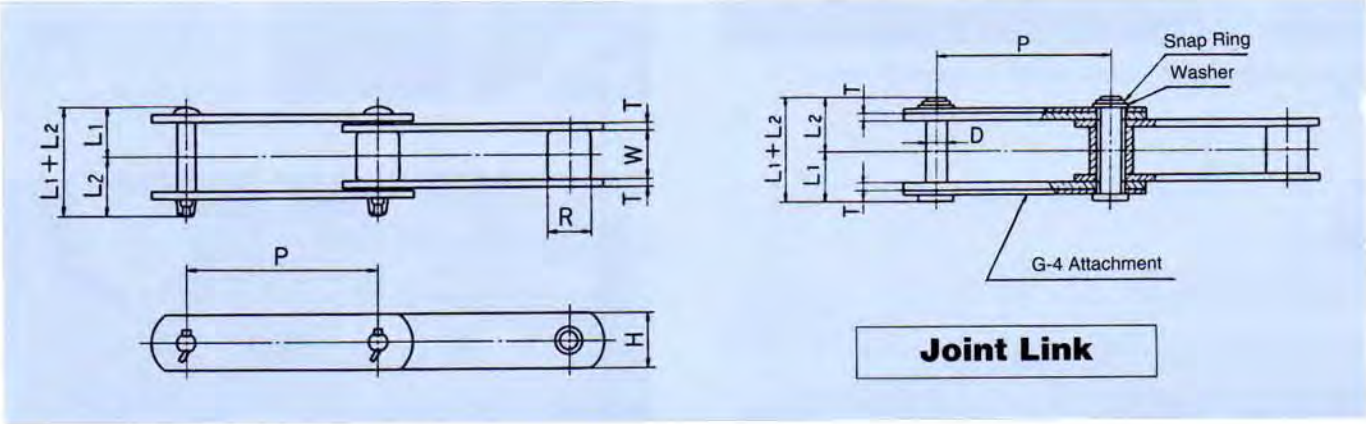

Chain No.	Pitch P	Roller Diameter R	Inner Width W	Link Plate H	Link Plate T	Pin L_1+L_2	Pin L_1	Pin L_2	Approx. Weight (kgf/m)	Average Ultimate Strength(kgf) Standard Series	Average Ultimate Strength(kgf) Heavy Series
B 10150-S	150	29	30	38.1	6.3	69	33	36	5.4	11,500	23,000
B 12006-S B 12200-S	152.4 200	34.9	37.1	44.5	7.9	83.5	40.5	43	8.6 7.8	19,000	28,500
B 17200-S B 17250-S	200 250	40.1	51.4	50.8	9.5	109.5	51.5	58	11.6 10.7	25,000	39,500
B 26200-N B 26250-N B 26300-N	200 250 300	50.8	57.2	63.5	9.5	117 129.5	56 68.5	61	16.2 14.7 13.9	32,000	53,000
B 36250-N B 36300-N B 36350-N	250 300 350	57.2	66.7	76.2	12.7	147 159	69 81	78	23.7 22.1 20.6	48,500	88,500
B 60300-N B 60350-N B 60400-N	300 350 400	70	77	90	12.7	172	88	84	29.7 27.8 26.4	62,000	106,000
B 90350-N B 90400-N	350 400	85	88	110	16	197	101.5	95.5	45.9 43.4	95,000	166,000
B120400-N	400	110	100	130	19	227.5	119.5	108	63.5	113,000	225,000

• Joint Link

Chain No.	Pitch P	D	L_1	L_2	L_1+L_2	T
B36300-N · B36350-N	300·350	28	83	81	164	22
B60300-N · B60350-N · B60400-N	300·350·400	35	88	88	176	22
B90350-N · B90400-N	350·400	42	102.5	101.5	204	16
B120400-N	400	50	114.5	115.5	230	19

• Attachment

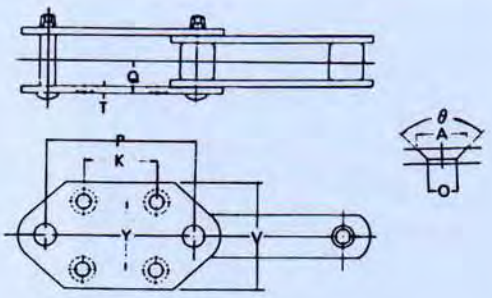

G-4 Attachment

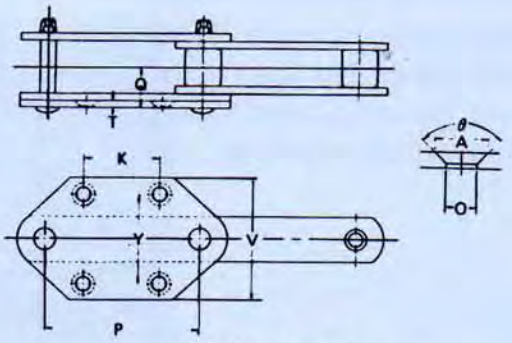

G-4 Attachment
(Double Plate Assembled)

• G-4 Attachment

Chain No.	P	V	K	Y	T	Q	A	O	θ	Bolt	Approx. Weight with Attachment every 2ℓ (kg/m)
B10150-S	150	110	75	70	6.3	28.5	26	15	90°	M12	7.0
B12006-S B12200-S	152.4 200	110 120	75 100	70 80	7.9	35.5	26	15	90°	M12 M14	10.5 9.9
B17200-S B17250-S	200 250	120 150	100 140	80 100	9.5	45.5	26 32	15 19	90°	M14 M16	13.9 14.0
B26200-N B26250-N	200 250	120 150	100 140	80 100	9.5	48	26 32	15 19	90°	M14 M16	18.3 17.8
B36250-N	250	150	140	100	12.7	60	32	19	90°	M16	27.5

Note) Refer to B.C-type Conveyor Chains for B.C-type G₄ Attachments.

• G-4 Attachment (Double Plate Assembled)

Chain No.	P	V	K	Y	T	Q	A	O	θ	Bolt	Approx. Weight with Attachment every 2ℓ (kg/m)
B 26300-N	300	200	170	140	12	60	38	24	90°	M20	22.5
B 36300-N B 36350-N	300 350	200 240	170 200	140 170	12 12	72 72	38 40	24 28	90° 60°	M20 M24	31.4 31.2
B 60300-N B 60350-N B 60400-N	300 350 400	200 240 280	170 200 230	140 170 200	12 12 16	77 77 81	38 40 50	24 28 35	90° 60° 60°	M20 M24 M30	39.5 38.8 42.8
B 90350-N B 90400-N	350 400	240 280	200 230	170 200	12 16	89.5 93.5	40 50	28 35	60° 60°	M24 M30	57.8 60.8
B120400-N	400	280	230	200	16	105.5	50	35	60°	M30	82.2

7. FLOW CONVEYOR CHAINS

■ Flow Chain

This chain is most suitable for pollution control, as it conveys powdery matters, mainly feed and cement, in an airtight case. Attachments chosen in consideration of the materials are welded to the link plate.

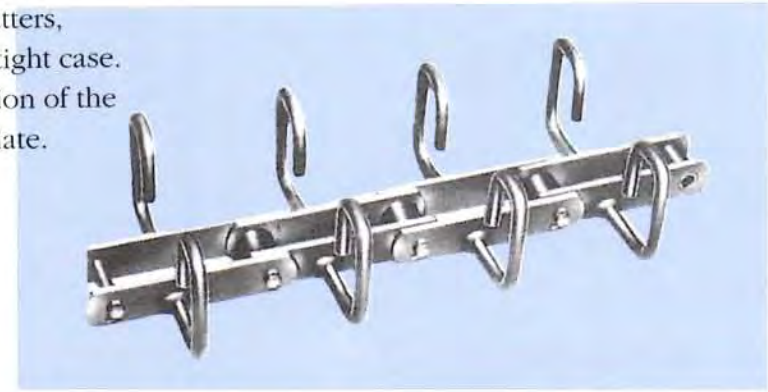

• Standard Series

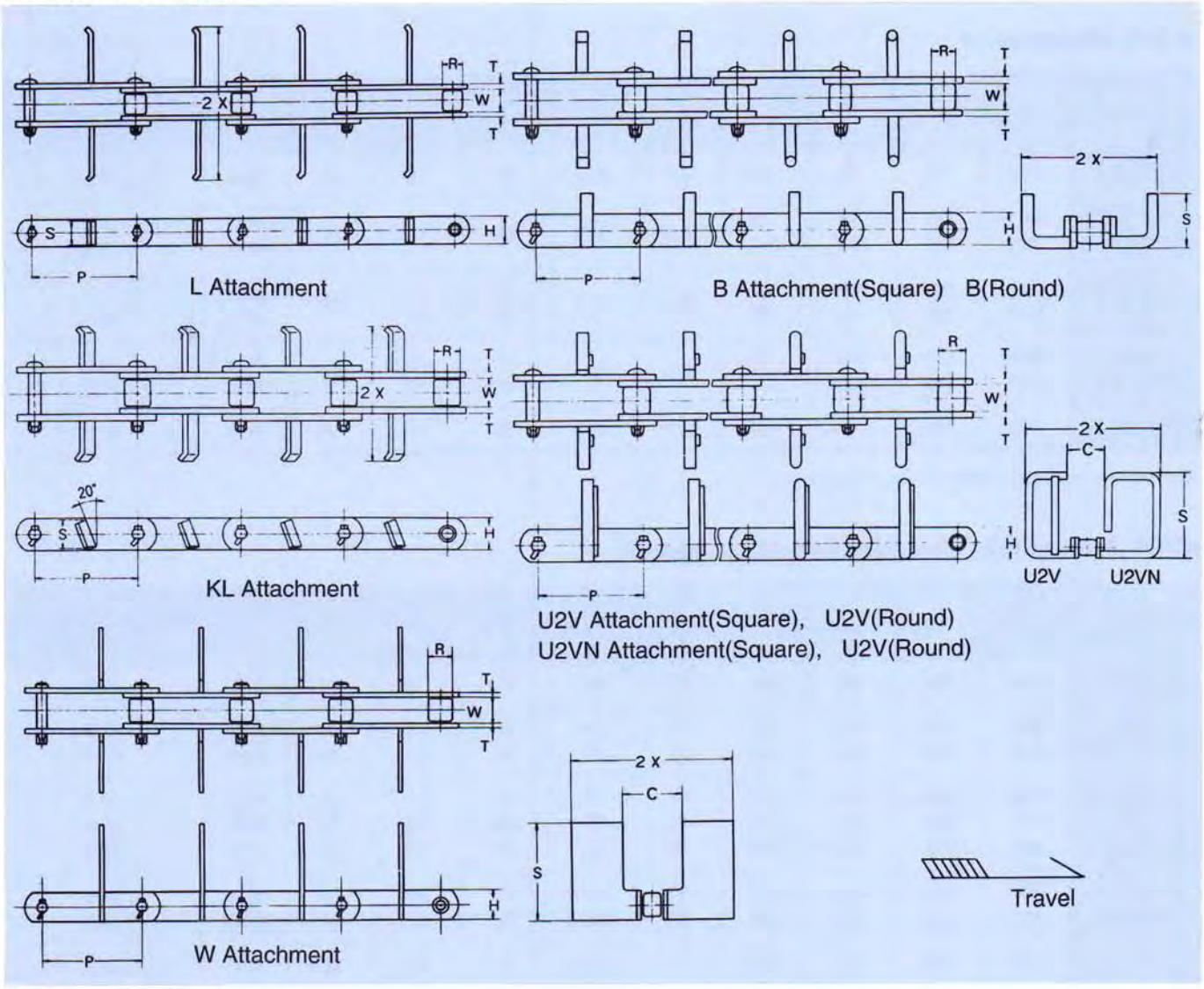

Chain No.	Type of Conveyor	Pitch P	Roller Diameter	Inner Width W	Link Plate Height H	Link Plate Thickness T	Average Ultimate Strength(kgf) Standard Series	Average Ultimate Strength(kgf) Heavy Series
BC450W-M	FC150	101.6	25.4	27	31.8	6.3	11,000	14,500
BC08125W-M	FC200	125	25.4	27	31.8	6.3	11,000	14,500
BC10125-M BC10150-M	FC200 FC270	125 150	31.75	30	38.1	6.3	11,500	23,000
BC6205-M	FC270	152.4	38.1	37.1	44.5	7.9	19,000	28,500
BC12200-M	FC350	200	38.1	37.1	44.5	7.9	19,000	28,500
BC17200-M BC17250-M	FC350 FC450	200 250	44.5	51.4	50.8	9.5	25,000	39,500
BC26200-M BC26250-N BC26300-N	FC410 FC450 FC580	200 250 300	50.8	57.2	63.5	9.5	32,000 30,500 30,500	53,000 55,500 55,500
BC36300-M BC36300-N	FC580	300	57.2	66.7	76.2	12.7	48,500	69,500 88,500

Chain No.	2X	L Attachment Height S	L Attachment Weight (kgf/m)	KL Attachment Height S	KL Attachment Weight (kgf/m)	B Attachment Height S	B Attachment Weight (kgf/m)	U2V Attachment Height S	U2V Attachment C	U2V Attachment Weight (kgf/m)	W Attachment Height S	W Attachment C	W Attachment Weight (kgf/m)
BC450W-M	135	28	6.5	28	6.5	55	7.4	80	60	9.1	80	60	8.1
BC08125W-M	185	28	6.5	28	6.5	80	8.2	115	85	10.1	115	85	10.3
BC10125-M BC10150-M	185 250	34	8.1	34	8.1	80 100	8.9 9.8	115 140	85 105	10.9 12	115 140	85 105	11.3 13.0
BC6205-M	250	40	12	40	12	100	14.4	140	105	18.5	140	105	17.2
BC12200-M	330	40	12	40	12	125	16.3	185	130	20	185	130	22.6
BC17200-M BC17250-M	330 430	46	17	46	17	125 160	18.7 19.3	185 230	130 135	23 23.7	185 230	130 135	26.3 31.5
BC26200-M BC26250-N BC26300-N	390 430 560	58	28 23 23	58	28 23 23	150 160 200	25 25 27	233 230 290	100 135 160	33.4 29 30.6	233 230 290	100 135 160	41.7 35.7 53.0
BC36300-M BC36300-N	560	70	34	70	34	200	37	290	160	40	290	160	61.3

■ Applications by Type of Attachment

Type of Attachment	Applications
L	for grains such as wheat, and powdery matters such as cement
KL	for sticky powdery matters
B Round	to carry flour, cement and other powdery matters more efficiently than L attachment
B Square	for lumpy, granular, or sticky materials that are difficult to carry using B Round
U2V Round U2VN Round	for larger conveyors than those with L, KL, and B, or for inclined elevation
U2V Square U2VN Square	for lumpy, granular, or sticky materials that are difficult to carry using U2V(U2VN) Round
W	for powdery matters that are easily blown off

■ Chain Numbering System

BC10150 — Chain No.

M — Type of Roller

KL — Type of Attachment

1/1 — Attachment Spacing

7. FLOW CONVEYOR CHAINS

• Inclined Flow Conveyor Chains

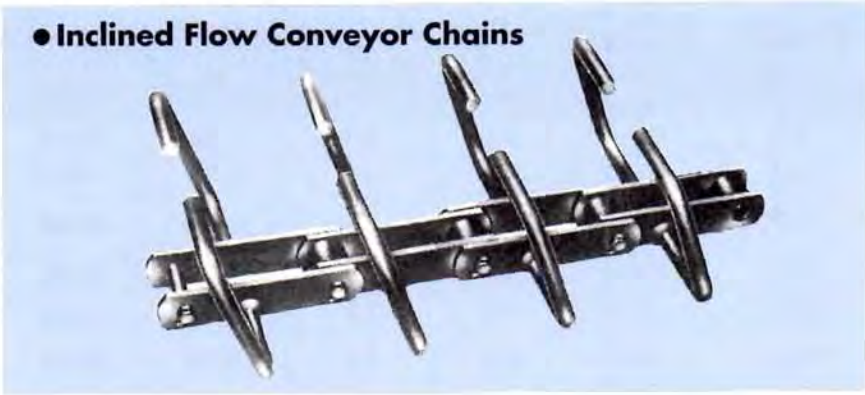

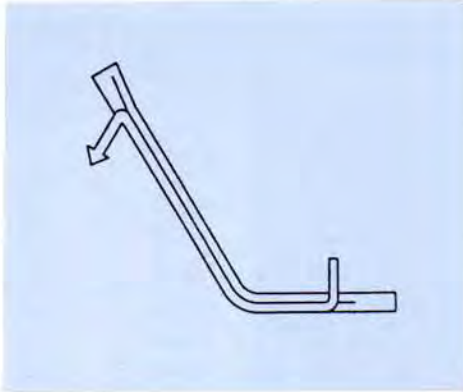

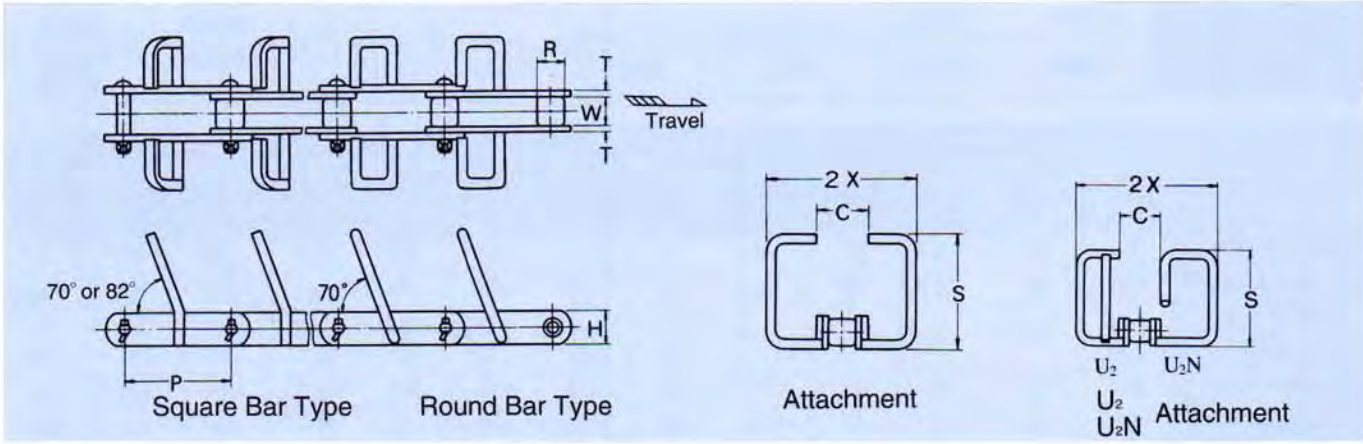

Chain No.	Type of Conveyor	Pitch P	Roller Diameter R	Inner Width W	Link Plate Height H	Link Plate Thickness T	2X	U Attachment Height S	U Attachment C	U Attachment Weight (kgf/m)	U2(U2N) Attachment Height S	U2(U2N) Attachment C	U2(U2N) Attachment Weight (kgf/m)	Average Ultimate Strength(kgf) Standard Series	Average Ultimate Strength(kgf) Heavy Series
BC450W-M	FL 160 FS	101.6	25.4	27	31.8	6.3	145	110	50	10.1	110	50	10.9	11,000	14,500
BC10125-M	FL 240 FS	125	31.75	30	38.1	6.3	225	140	65	14.3	140	65	15.7	11,500	23,000
BC6205-M	FL 320 FS	152.4	38.1	37.1	44.5	7.9	300	175	80	20.1	175	80	21.7	19,000	28,500
BC17200-M	FL 410 FS	200	44.5	51.4	50.8	9.5	390	220	100	27.9	220	100	30.3	25,000	39,500
BC26200-M BC26200-N	FL 410 FS	200	50.8	57.2	63.5	9.5	390	220	100	30.9	220	100	33.3	32,000 30,500	53,000 57,500
BC36300-M	FL 500 FS	300	57.2	66.7	76.2	12.7	480	260	120	42.5	260	120	44.8	48,500	–
	FL 600 FS						580	305	140	47	305	140	48.1		
BC36300-N	FL 500 FS	300	57.2	66.7	76.2	12.7	480	260	120	42.5	260	120	44.8	–	88,500
	FL 600 FS						580	305	140	47	305	140	48.1		

• Flow Conveyor Chains for Grains

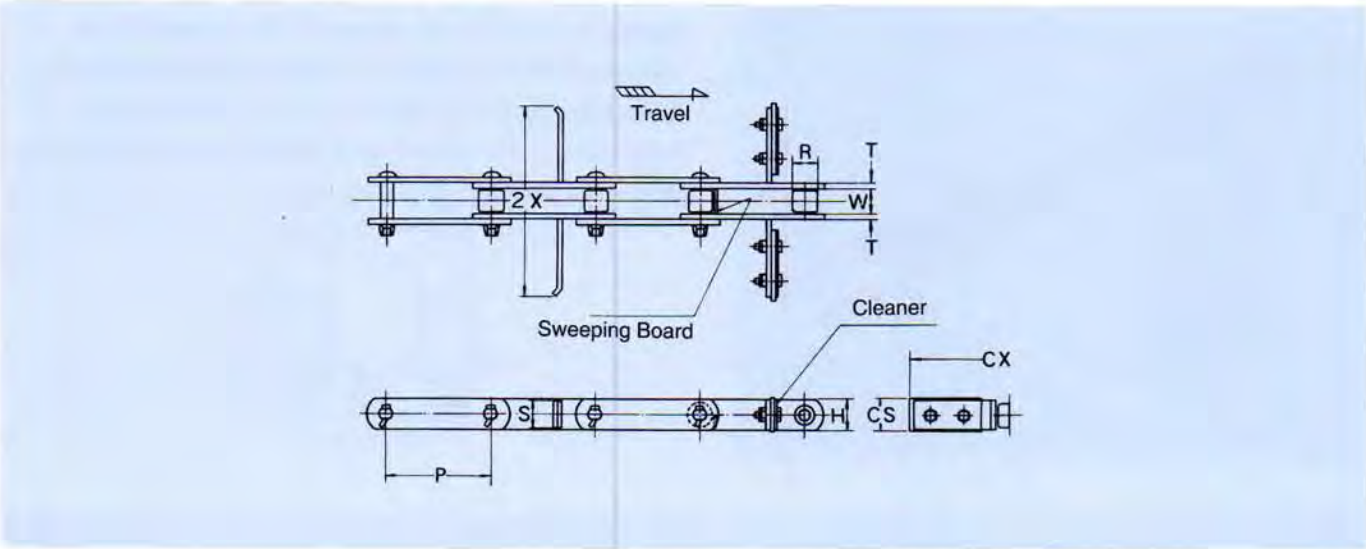

Chain No.	Type of Conveyor	Pitch P	Roller Diameter R	Inner Width W	Link Plate		Attachment		Cleaner		Approx. Weight	Average Ultimate Strength(kgf)
					Height H	Thickness T	2X	Height S	Width CX	Height CS		
BC03075-S	FK 110	75	15.9	16.1	22	3.2	95	20	105	28	2.1	3,000
BC430-S	FK 150	101.6	20.1	22.6	25.4	4.8	135	22	145	32	3.4	5,500
BC450-S	FK 150	101.6	22.2	27	28.6	6.3	135	25	145	34	5.0	8,000
BC08125-S	FK 200	125	22.2	27	28.6	6.3	185	25	195	34	5.0	8,000
BC10125-S	FK 200 FK 240	125	29	30	38.1	6.3	185 225	34	195 235	47	6.8 7.3	11,500
BC10150-S	FK 270 FK 320	150	29	30	38.1	6.3	250 300	34	265 315	47	6.9 7.2	11,500
BC6205-S	FK 270	152.4	34.9	37.1	44.5	7.9	250	40	265	53	10.5	19,000
BC12200-S	FK 350	200	34.9	37.1	44.5	7.9	330	40	345	53	10.3	19,000
BC17200-S	FK 350 FK 450	200	40.1	51.4	50.8	9.5	330 430	46	345 445	58	14.0 16.0	25,000
BC26200-S	FK 450	200	44.5	57.2	63.5	9.5	430	58	445	68	21.0	32,000

■ Chain Numbering System

BC10150 **M** **KL** **1/1**

- BC10150 — Chain No.
- M — Type of Roller
- KL — Type of Attachment
- 1/1 — Attachment Spacing

• NF-type Flow Conveyor Chains

NF-type Flow Chains are suitable for goods that require wearproof conveyance. The inner link is manufactured by forging or flame cutting, while the outer link plate by press work using steel sheet. Attachments are chosen and welded in consideration of the materials to be conveyed.

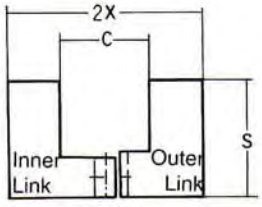

Section A-A

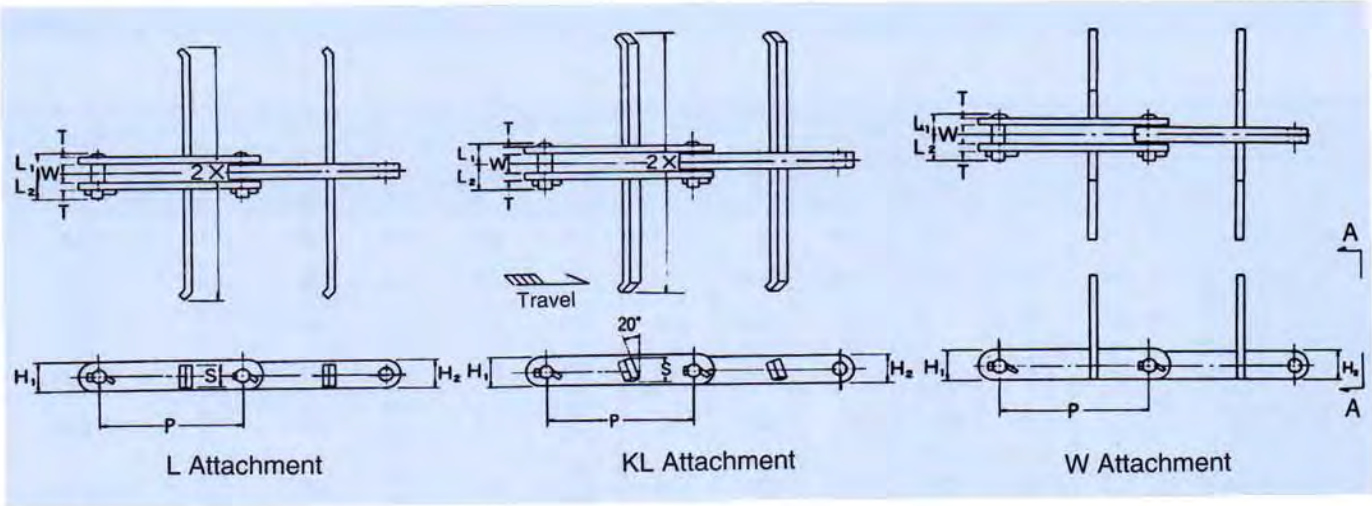

L Attachment KL Attachment W Attachment

• NF Chain Dimensions

Chain No.	Pitch P	Plate H_1	Plate H_2	Pin L_1	Pin L_2	T	W	Approx. Weight (kgf/m)	Average Ultimate Strength(kgf)
NF30150 NF30200	150 200	44.5	38.1	23.5	32	7.9	23.3	7.9 7.6	31,500
NF56200 NF56250	200 250	63.5	54.0	28.5	39.5	9.5	29.5	14.7 14.5	56,500

• Horizontal Conveyor Chain Attachments

Chain No.	Type of Conveyor	L Attachment 2X	L Attachment Height S	L Attachment Additional Weight (kg/pc)	KL- Attachment 2X	KL- Attachment Height S	KL- Attachment Additional Weight (kg/pc)	W- Attachment 2X	W- Attachment Height S	W- Attachment Inner Width C	W- Attachment Additional Weight (kg/pc)
NF 30150	FC150	135	34	0.18	135	34	0.18	135	80	60	0.33
	FC200	185		0.26	185		0.26	185	115	8.5	0.68
	FC270	250		0.36	250		0.36	250	140	105	1.12
NF 30200	FC350	330		0.74	330		0.74	330	185	130	2.94
	FC450	430		0.98	430		0.98	430	230	135	5.14
NF 56200	FC410	390	51	1.3	390	51	1.3	390	233	100	5.0
NF 56250	FC450	430		1.44	430		1.44	430	230	135	5.2
	FC580	560		1.92	560		1.92	560	290	160	8.6

9. NF-TYPE BLOCK CHAINS

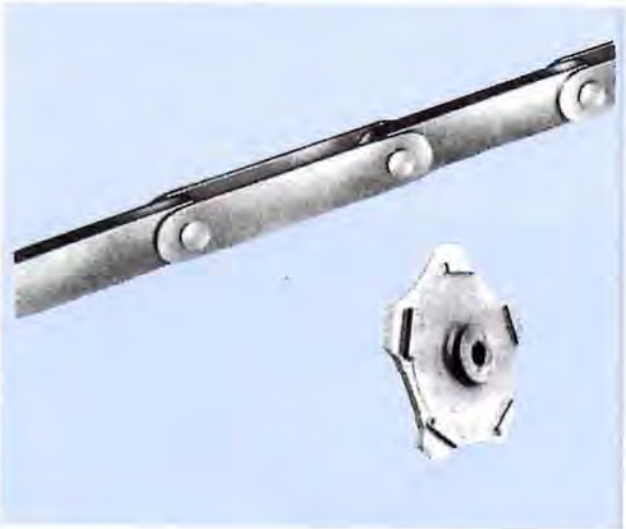

These chains consist of outer link plates, inner block, and pins. They have excellent rigidity with greater tensile strength. Key chain components are made of heat-treated steel for higher wear resistance. These chains are usually used as shown below.

Applications

1. Pushing trucks
2. Conveying hot materials on chains
3. Draw bench usage

● Use projected sprockets (piece attachment) to reduce inside tensile strength.

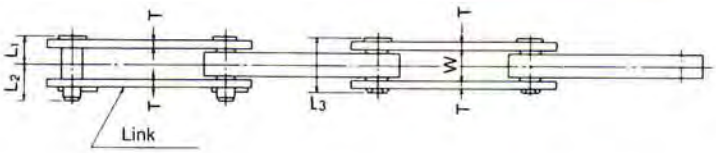

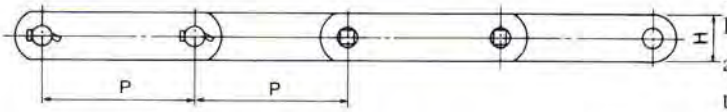

Chain No.	Pitch P	Link Height H	Pin L_1	Pin L_2	Pin L_3	Outer Link Plate Thickness T	Inner Width of Outer Link W	Approx. Weight (kgf/m)	Average Ultimate Strength (kgf)
NF30150 NF30200	150 200	38.1	24	32	49	7.9	23.3	7.0 6.6	31,500
NF40150 NF40200	150 200	44.5	25.5	35.5	52	7.9	26.5	9.0 8.5	40,500
NF56200 NF56250	200 250	54	29.5	40.5	60	9.5	29.5	12.3 12.0	56,500
NF63200 NF63250	200 250	57	30.5	41.5	62	9.5	31.5	13.7 13.0	63,000
NF70200 NF70250	200 250	63.5	31.5	42.5	64	9.5	33.5	16.2 15.5	73,500
NF90200 NF90250	200 250	72	34.5	45.5	70	10.5	38	21.0 20.0	92,500
NF115250 NF115300	250 300	76.2	38	49	77	12.7	40	25.0 24.0	114,000
NF140250 NF140300	250 300	85	44	54	88	14	47.5	32.0 31.0	143,000
NF180300 NF180350	300 350	95	48.5	58.5	97	16	52.5	39.0 37.8	177,500
NF210300 NF210350	300 350	110	51.5	61.5	103	16	59	50.0 48.8	219,500
NF250300 NF250350	300 350	112	58.5	68.5	118	19	66	58.8 56.7	248,500
NF280300 NF280350	300 350	122	58.5	68.5	118	19	67	66.0 62.3	277,500

There are diverse dogs, of which major ones are as follows;

1.Fixed Dog

Either the inner link plate or the outer link plate is lifted to push goods.

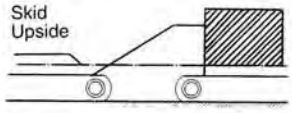

2.Tilting Dog

It pushes the goods in front as the fixed dog does, and tilts to pass the goods in back. Then the dog returns to the original state

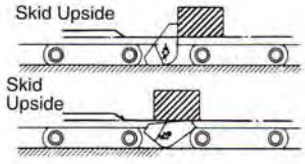

3.Ducking Dog

It transfers goods on a guide rail. When the guide rail stops, it ducks with the goods left behind.

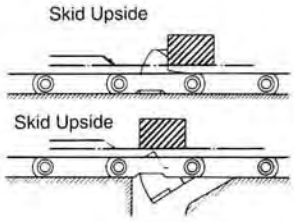

4.Tilting/Ducking Dog

It has both functions of tilting dogs and ducking dogs. It pushes goods on a guide rail, and tilts to pass the goods in back. When the guide rail stops, it ducks with the goods left behind.

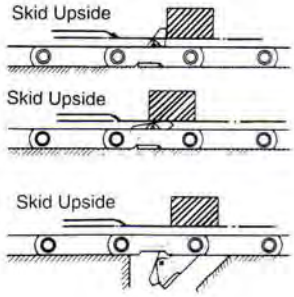

10. EF-TYPE FLOW CHAINS

These highly heatproof and wearproof chains have forged block links and welded attachments. They are used for flow conveyors of abrasive powdery matters.

• EF-type Flow Conveyor Chains

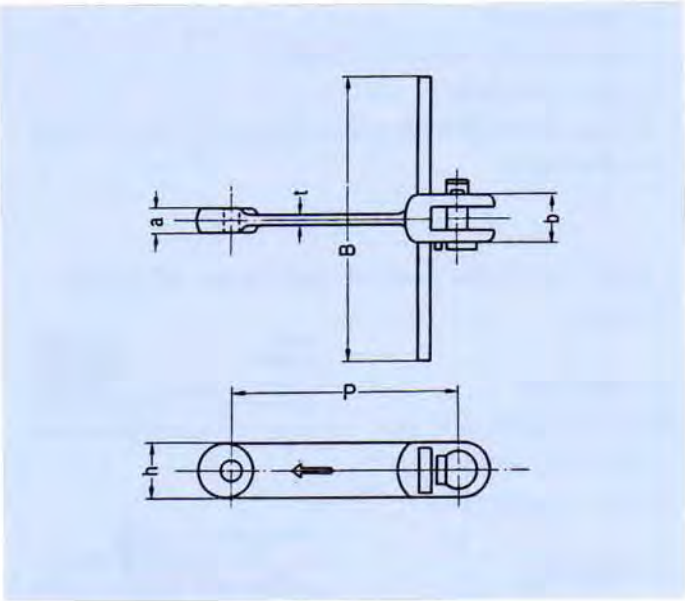

• Chain and Attachment Dimensions

Chain No.	Pitch **P** (mm)	Maximum Allowable Load (kg)	Average Ultimate Strength (kg)	Link Dimensions (mm)				Attachment Dimensions **B**(mm)	Weight (kg/m)
				a	b	h	t		
EF05125	120	830	5,000	10	21	26	6	125	3.30
EF05150	120	830	5,000	10	21	26	6	150	3.33
EF05190	120	830	5,000	10	21	26	6	190	3.40
EF10125	150	1,670	10,000	15	32	34	8	125	4.60
EF10150	150	1,670	10,000	15	32	34	8	150	4.86
EF10190	150	1,670	10,000	15	32	34	8	190	6.05
EF10240	150	1,670	10,000	15	32	34	8	240	6.80
EF10290	150	1,670	10,000	15	32	34	8	290	8.85
EF10340	150	1,670	10,000	15	32	34	8	340	9.84
EF20150	150	2,500	20,000	18	37	40	10	250 330	10.7 12.3
EF30142	142	3,340	30,000	19	42	50	11	330 390	18.2 20.1
EF30150	150	3,340	30,000	19	42	50	11	340 410	15.9 21.2
EF50142	142	6,600	50,000	26	54	54	14	330	22
EF50200	200	6,600	50,000	26	54	54	14	480 560	24.6 27.2
EF 363	142	8,700	60,000	29	62	50	16		
EF40200	200	6,600	40,000	22	45	52	12	430 480	20.8 22.4
EF32200	200	5,000	32,000	20	42	46	12	390 430	16.8 17.8
EF80260	260	11,000	80,000	31	72	75	20	560	46.2

※ Attachment B depends on the sizes of conveyor casing.

11. SPROCKETS FOR EF-TYPE FLOW CHAINS

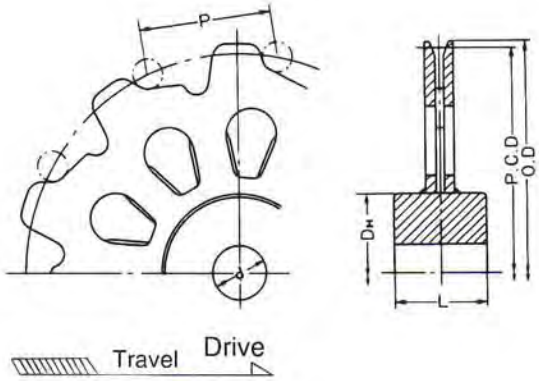

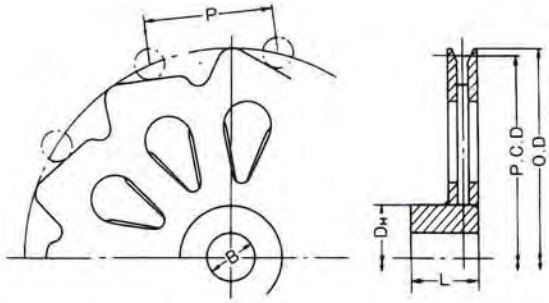

Tail Wheel

mm

Chain No.	Number of Teeth NT	Pitch P	Pitch Diameter P.C.D	Outside Diameter O.D	Maximum Boss Diameter d	HUB DH	HUB L	Approx. Weight (kg)
EF 10150	8	150	392	416	85	135	90	24.8
	9		438.6	462				28
	10		485.4	510				31.5
EF 20150	9	150	438.6	466	95	150	100	36
	10		485.4	512				40.5
	11		532.4	560				45.4
EF 30142	9	142	415.18	447	110	180	120	
	10		459.5	491				
	11		504	536				
EF 30150	9	150	438.6	470	110	180	120	52.9
	10		585.5	516				58.2
	11		532.4	564				64.2
EF 50142	9	142	415.18	452	165	270	190	
	10		459.5	496				
	11		504	541				
EF 50200	11	200	709.9	748	165	270	190	167
	12		772.7	810				180
	13		835.7	874				198
EF 40200	10	200	647.2	682	160	260	180	139
	11		709.9	746				151
	12		772.7	810				163
EF 32200	10	200	647.2	680	145	230	160	100
	11		709.9	742				113
	12		772.7	804				123

12. EO-TYPE FLOW CHAINS

Two steel sheets are lapped over a link plate.
Pressure-inserted bushes into the moving surfaces of link plates and pins improve abrasion resistance.
There are widely-used standard series and highly wearproof heavy series.
These chains are specially employed to carry highly abrasive particulate matters.

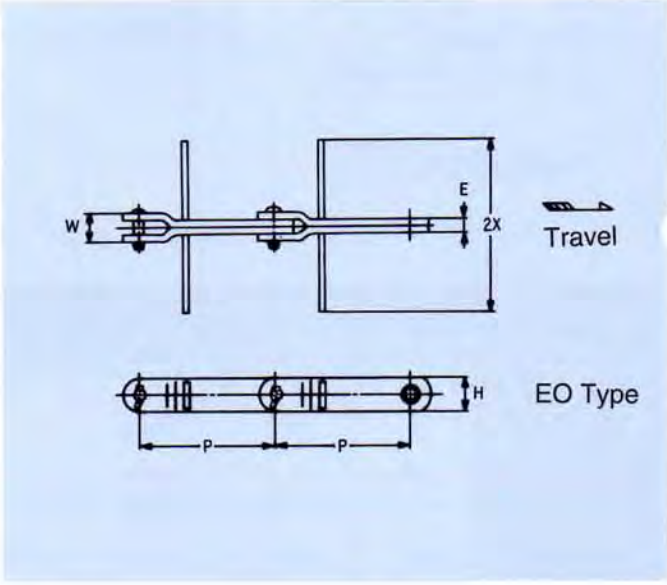

• EO-type

Chain No.	Pitch P	Link			Attachment 2X	Approx. Weight (kg/m)	Average Ultimate Strength (kg)
		W	E	H			
EO 10150	150	40	19	38.1	135 185	9.3 10.2	10,000(13,000)
EO 16150	150	40	19	44.5	185 250	12.1 13.4	16,000(21,000)
EO 25200	200	40	19	50.8	330 430	16.9 19.2	25,000(33,000)
EO 40200	200	53	25.4	76.2	330 480	38.3 40.7	40,000(63,000)
EO 60250	250	68	32	76.2	480 560	40.2 43.1	60,000(85,000)

Note) Parenthesized numbers are weight specifications for heavy series.
*Attachment 2X depends on the sizes of conveyor casing.

■ Side Roller Chains

This chain is used when special attachments are attached or when it is difficult for the central S-roller to support loads. Side rollers are attached to both ends of extended chain pins. It is driven by the central S-roller and run by the side roller.
If the line is so long that it may surge, make side rollers into bearings or pressure-insert ball bearings.

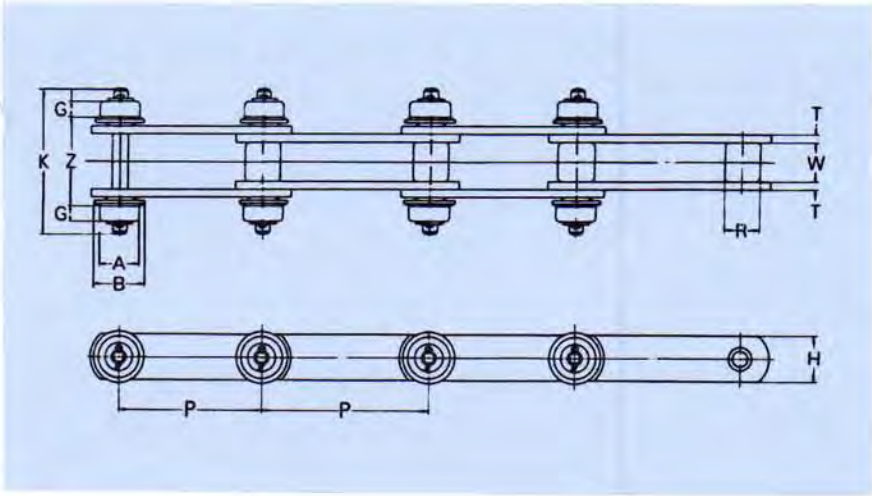

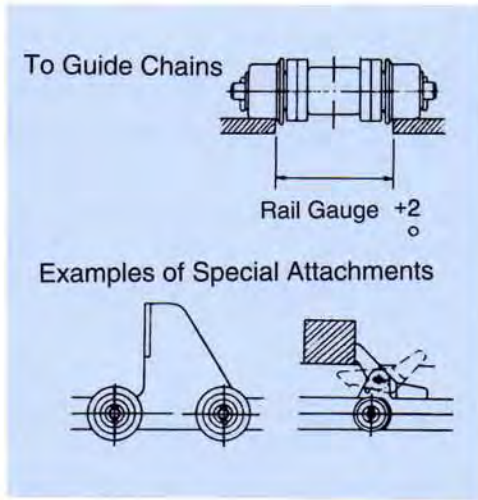

Chain No.	Pitch P	Roller Diameter R	Inner Width W	Plate H	Plate T	Side Roller A	Side Roller B	Side Roller G	K	Z	Side Roller (kgEA)	Rail Intervals	Side Roller Allowable Load (Both Sides)
BC03075-S BC 03100-S	75 100	15.9	16.1	22	3.2	31.75	42	12	76	38	0.3	40	110
BC 430-S	101.6	20.1	22.6	25.4	4.8	38.1	50	15	103	56	0.5	58	160
BC 05075-S BC05100-S BC05150-S	75 100 150	22.2	22	32	4.5	40	50	14	102	55	0.5	57	200
BC 450-S	101.6	22.2	27	28.6	6.3	44.5	55	20	130	70.5	0.7	72.5	240
BC 10100-S BC 10150-S	100 150	29	30	38.1	6.3	50.8	65	20	136	73	1.0	75	330
BC 6205-S	152.4	34.9	37.1	44.5	7.9	57.2	70	25	167	90.5	1.3	92.5	470
BC 12200-S BC12250-S	200 250	34.9	37.1	44.5	7.9	65	80	24	167	92.5	1.8	94.5	470
BC17200-S BC17250-S BC17300-S	200 250 300	40.1	51.4	50.8	9.5	65	80	24	192	112.5	3.8	114.5	540
BC 26200-S BC 26250-S BC 26300-S	200 250 300	44.5	57.2	63.5	9.5	80	100	34	229	124.5	6.9	126.5	860
BC 36250-S BC 36300-S BC 36450-S	250 300 450	50.8	66.7	76.2	12.7	100	125	38	268	151	11.7	153	1130

Note) Basic specifications of the chains are same to those of B.C-type Conveyor Chains.

■ Top Roller Chains

These chains are employed to temporarily stop goods using a stopper without interrupting chains, to convey and stop them at the same time on chains as shown in Fig.1, or to load and unload them with less shock as shown in Fig.2.

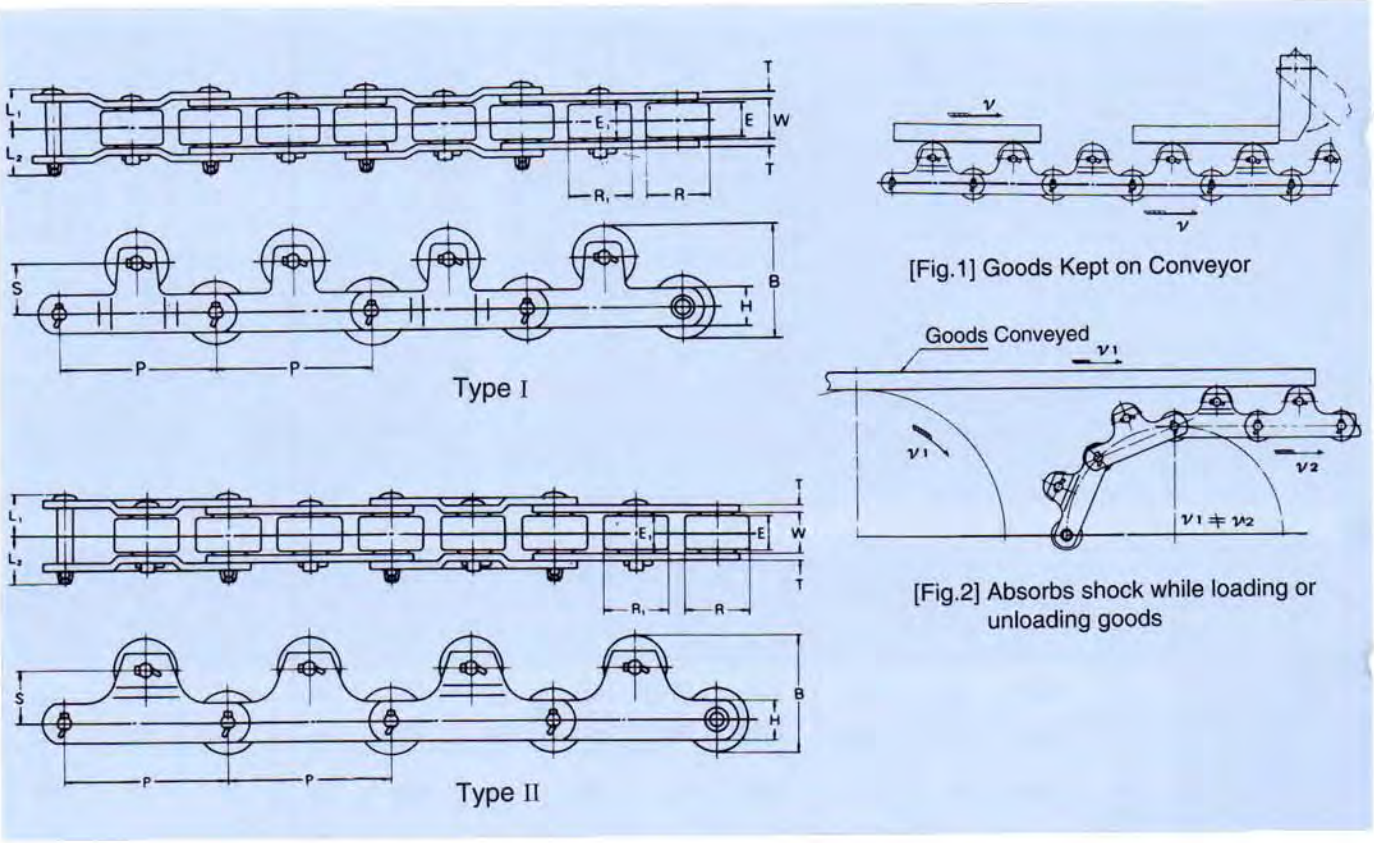

Chain No.	P	Roller		Inner Width	Link Plate		Pin		S	Top Roller		B	Approx. Weight (kgf)	Additional Weight per Top Roller(kgf)	Top Roller Allowable Load(kgf/pc)	
		R	E	W	H	L	L_1	L_2		R_1	E_1				Standard Series	Quenched Series
BC 03075-R	75	31.75	15.5	16.1	22	3.2	17.5	19.5	23.1	40	PL:20	59	2.7	0.18	35	60
BC 03100-R	100										RL:13		2.3			
BC 05100-R	100	40	19	22	32	4.5	24.6	29.6	30	40	19	70	5.0	0.26	65	105
BC 05150-R	150												4.1			
BC 08150-R	150	44.5	23	27	28.6	6.3	30.65	35.65	30	40	23	72.2	5.5	0.35	80	130
BC 10150-R	150	50.8	27	30	38.1	6.3	32.7	39.2	30	50.8	27	80.8	7.9	0.56	115	195
BC 6205-R	152.4	57.2	32	37.1	44.5	7.9	39.95	46.45	37.8	57.2	32	95	12.1	0.91	150	255
BC 12200-R	200	65	32	37.1	44.5	7.9	39.95	46.45	45	65	32	110	11.4	1.15	150	255
BC 17200-R	200	80	44	51.4	50.8	9.5	51.5	60	65	80	44	145	18.8	2.58	250	420

■ BCD-type Chains

As you can load goods directly on these chains, they are used to convey heavy weight steel plates or sections at steel mills or assemble chassis at automobile plants.
If the line is long, pressure-insert ball bearings into rollers in advance.

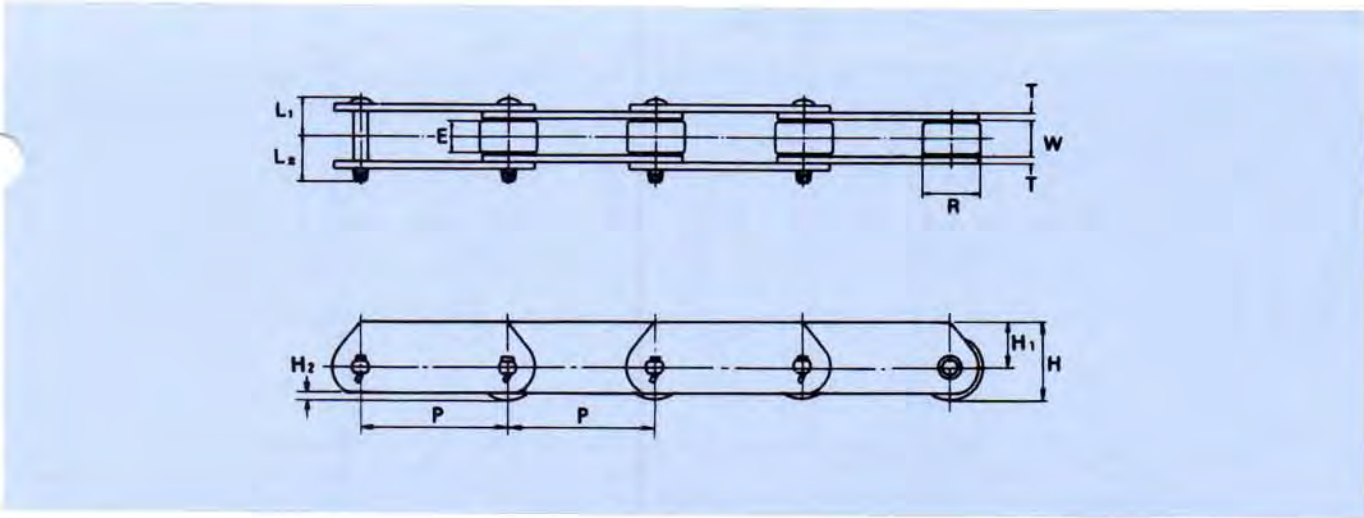

Chain No.	Pitch P	Roller Diameter R	Roller Engaged Width E	Inner Width of Roller Link W	Height H	Link Plate Height H1	Link Plate Height H2	Link Plate Thickness T	Pin L1	Pin L2	Approx. Weight (kgf)	Roller Allowable Load(kgf/pc) Standard Series	Roller Allowable Load(kgf/pc) Heavy Series	Average Ultimate Strength(kgf) Standard Series	Average Ultimate Strength(kgf) Heavy Series
BCD03075R	75	31.75	15.5	16.1	36.9	21	4.9	3.2	17.5	19.5	3.2	55	90	3,000	7,100
BCD03100R	100										2.8				
BCD05100R	100	40	19	22	44	24	4	4.5	24.6	29.6	5.9	105	175	7,000	14,500
BCD05150R	150										4.9				
BCD08150R	150	44.5	23	27	50.3	28	8	6.3	30.65	35.65	7.0	130	215	8,000	14,500
BCD10150R	150	50.8	27	30	57.4	32	6.4	6.3	32.7	39.2	9.7	180	300	11,500	23,000
BCD10200R	200										8.5				
BCD6205R	152.4	57.2	32	37.1	63.5	35	6	7.9	39.95	46.45	14.0	225	425	19,000	28,500
BCD12200R	200	65	32	37.1	73.5	41	10	7.9	39.95	46.45	14.9	225	425	19,000	28,500
BCD12250R	250										13.5				
BCD17250R	250	80	44	51.4	90	50	13.8	9.5	51.5	60	22.5	410	680	25,000	39,500
BCD17300R	300										21.5				
BCD26300R	300	85※	50	57.2	95.5	53	10.5	9.5	55.2	62.7	24.3	540	900	32,000	53,000
BCD36300R	300	100※	56	66.7	112	62	12	12.7	67.55	75.55	39.0	760	1,260	48,500	69,500
BCD36400R	400										34.2				
BCD52450R	450	110※	56	77	125	70	17	16	82.5	93	46.0	1,000	1,690	51,000	105,000

Note) ※ Note that these outside diameters are different from those of B.C-type conveyor chains.

■ SCT-type Chains

These large chains are used to directly convey primary products (cold coils, hot coils, slabs) at steel mills and large and heavy loads such as steel constructions of containers.

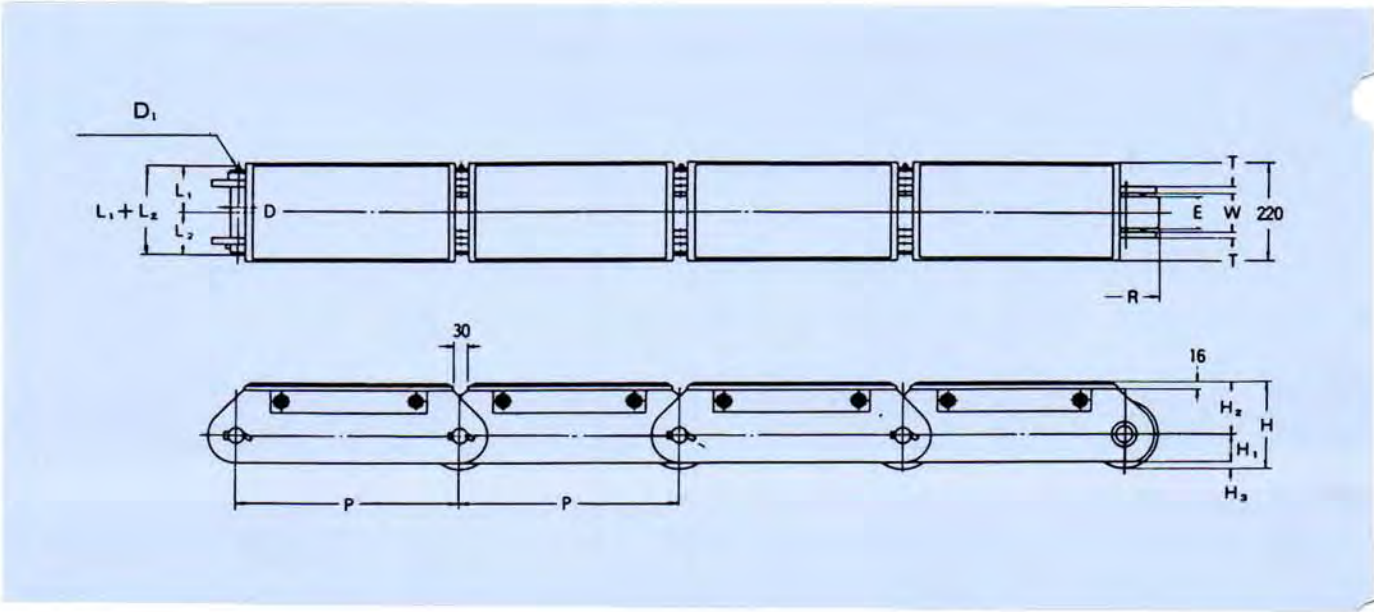

Chain No.	Pitch P	Roller R	Roller E	Inner Width W	Thickness T	Height H_1	Height H_2	Height H_3	Height H_4	Pin Diameter D	Pin Diameter D_1	Pin Length L_1+L_2	Pin Length L_1	Pin Length L_2	Approx. Weight (kgf/m)	Maximum Allowable Load (kgf)	Roller Allowable Load (kgf/pc)	Average Ultimate Strength (kgf)
SCT 60300	300	125	60	65	12	171	42.5	108.5	20	28	36	165	87	78	88	8,500	3,000	60,000
SCT 60400	400														80			
SCT 60500	500														76			
SCT 90300	300	135	65	79	12	182.5	54	115	13.5	30	36	179	94	85	97	12,800	3,600	90,000
SCT 90400	400														89			
SCT 90500	500														85			
SCT130300	300	150	70	84	15	195	61	120	14	38	46	197	103	94	119	18,500	4,300	130,000
SCT130400	400														109			
SCT130500	500														102			
SCT160400	400	175	80	91	17	227	69	139.5	18.5	41	46	209	109	100	139	22,800	5,700	160,000
SCT160500	500														130			
SCT160600	600														122			
SCT200600	600	180	90	102.6	19	225	76	135	14	45	50	229	119	110	141	28,500	6,600	200,000

■ Heavy Duty Offset Sidebar Chains

As all the parts are made of alloy steel and heat-treated, this heavy duty chain is wearproof, shockproof, and fatigue-resistant. It is especially used for the drive line of heavy equipment or draw benches.

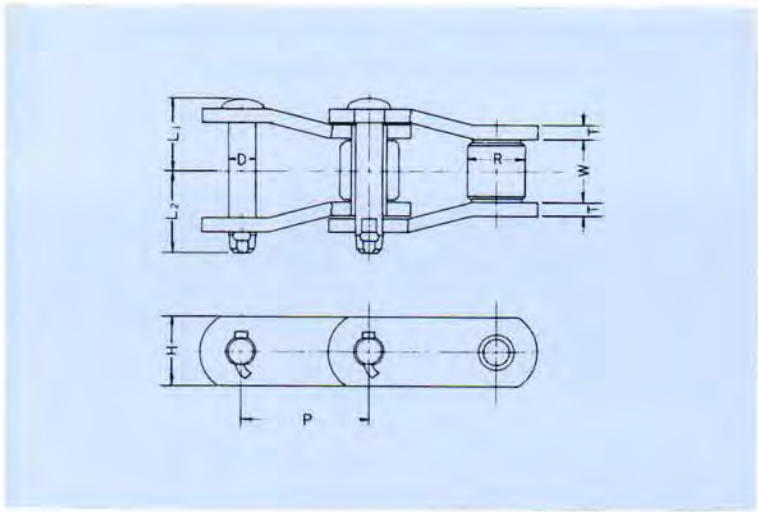

Chain No.	Pitch P	Average Ultimate Strength	Roller Diameter R	Inner Width W	Pin			Link Plate		Weight (kg/m)
					D	L_1	L_2	H	T	
RO 25H	63.5	34,000	31.75	38.1	15.88	43.1	49.4	41.5	9.5	13.7
RO 568	77.9	50,000	41.28	39.7	19.05	45.0	52.0	57	9.5	17.7
RO 3H	78.11	34,000	31.75	38.1	15.88	43.1	49.4	41.5	9.5	12.4
RO 3125	79.38	52,000	41.28	41.3	20.32	40.0	53.5	57.0	9.5	18.8
RO 1616	88.9	63,500	44.45	38.1	22.23	51.6	61.1	57.0	12.7	23.9
RO 4	103.2	63,500	44.45	49.2	22.23	57.0	66.0	54.0	12.7	21.0
RO 4H	103.2	77,000	44.45	49.2	22.23	64.0	73.0	59.0	16.0	23.2
RO 1245	103.45	77,000	45.24	49.2	23.80	60.5	69.5	60.0	14.5	27.2
RO 635	114.3	102,000	57.15	52.4	27.90	64.5	71.0	76.0	14.5	38.3
RO 3	78.11	21,700	31.75	38.1	15.88	40.05	46.65	38.0	8.0	10.5
RO 1343	103.89	98,000	47.63	49.2	25.40	62.5	69.5	70.0	14.5	31.9
RO 1345	103.89	92,000	50.80	49.2	25.40	62.5	69.5	70.0	14.5	32.9
RO 1602AA	127.0	150,000	63.5	69.9	31.75	77.2	84.3	90.0	16.0	52.3
RO 1605AK	127.0	170,000	63.5	69.9	34.93	83.5	89.5	91.0	19.0	54.3
RO 6042	152.4	190,000	76.2	76.2	38.10	87.3	97.6	101.0	19.0	71.3
RO 1625	63.5	43,000	39.69	38.1	19.80	41.0	46.0	59.0	8.0	16.3
RO 1613AK	50.8	31,700	28.58	31.8	15.06	36.2	41.8	42.9	8.1	11.3
RO 1664A	101.6	125,000	57.15	55.6	30.16	66.5	72.5	86.0	14.0	44.5

18. WH-TYPE CHAINS

These steel chains were adapted from cast pintle chains. Bushes and link plates are welded for monolithic construction with pins pressure-inserted to link plates.
These chains are superior to cast chains in precision and strength. W series have quenched pins, and WH series have quenched pins and link plates. Sprockets for cast pintle chains are used as they are.

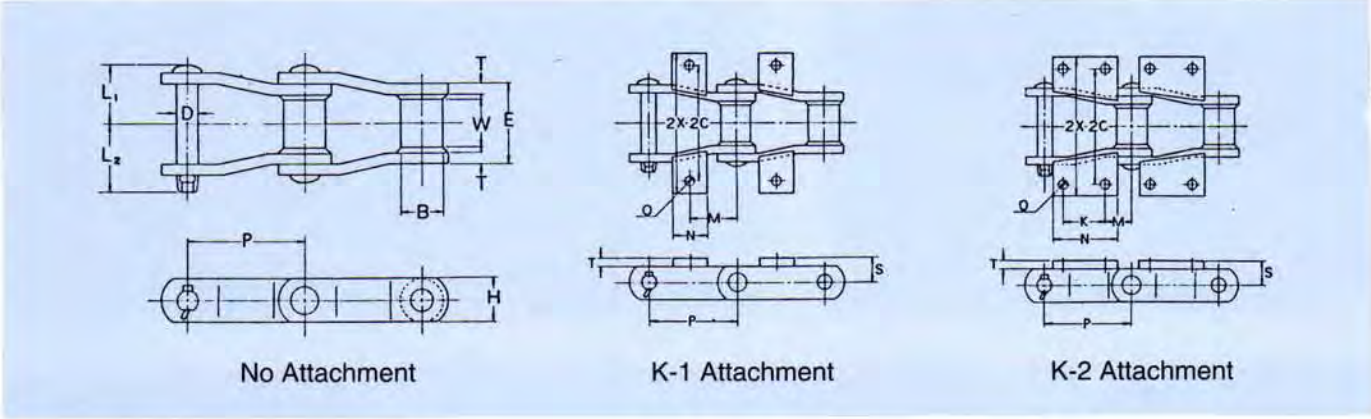

No Attachment K-1 Attachment K-2 Attachment

• Chains Without Attachment

Chain No.	Pitch P	Bush Bore B	Inner Width W	Pin D	Pin L_1	Pin L_2	E	H	T	Approx. Weight (kg/m)	Average Ultimate Strength (kg)
W 78 WH 78	66.27	22.2	31.8	12.7	36.5	42.0	50.5	28.6	6.3	6.0	10,400 13,800
W 82 WH 82	78.11	30.2	34.9	14.3	40.5	44.5	57.2	31.8	6.3	8.2	11,600 18,700
W 124 WH 124	101.60	36.5	41.3	19.05	52.0	59.0	69.9	38.1	9.5	12.7	19,700 27,400
W 132 WH 132	153.67	44.5	73.0	25.4	78.0	85.0	111.1	50.8	12.7	20.3	38,100 49,600
W 155 WH 155	153.67	44.5	73.0	28.6	84.5	96.0	117.5	63.5	16.0	30.0	63,500 86,600

• Chains With K-1, K-2 Attachment

Chain No.	P	S	2C	2X	Attachment M	Attachment N	Attachment M	Attachment K	Attachment N	T	O	Additional Weight (kg/pc)
W 78 WH 78	66.27	20.6	101.6	127	34.9	31.8	25.4	28.6	50.8	6.3	11	0.2(0.1)
W 82 WH 82	78.11	22.2	108	139.8	39.7	44.5	25.4	33.3	54.0	6.3	11	0.2(0.2)
W 124 WH 124	101.6	28.6	133.4	177.8	–	–	30.2	49.2	66.7	9.5	11	0.5
W 132 WH 132	153.67	34.9	165	190.6	–	–	42.9	69.9	110	12.7	15	1.1

※ Parenthesized numbers are for K-1 attachment.

19. PLANT BUCKET CONVEYOR CHAINS

These steel chains were adapted from cast pintle chains.
With bushes and link plates pressure-inserted, they are superior to cast chains in precision and strength.
They are mainly used for sand, gravel, and mud conveyors at construction sites.

• A : # 4103 B K_2 1/3

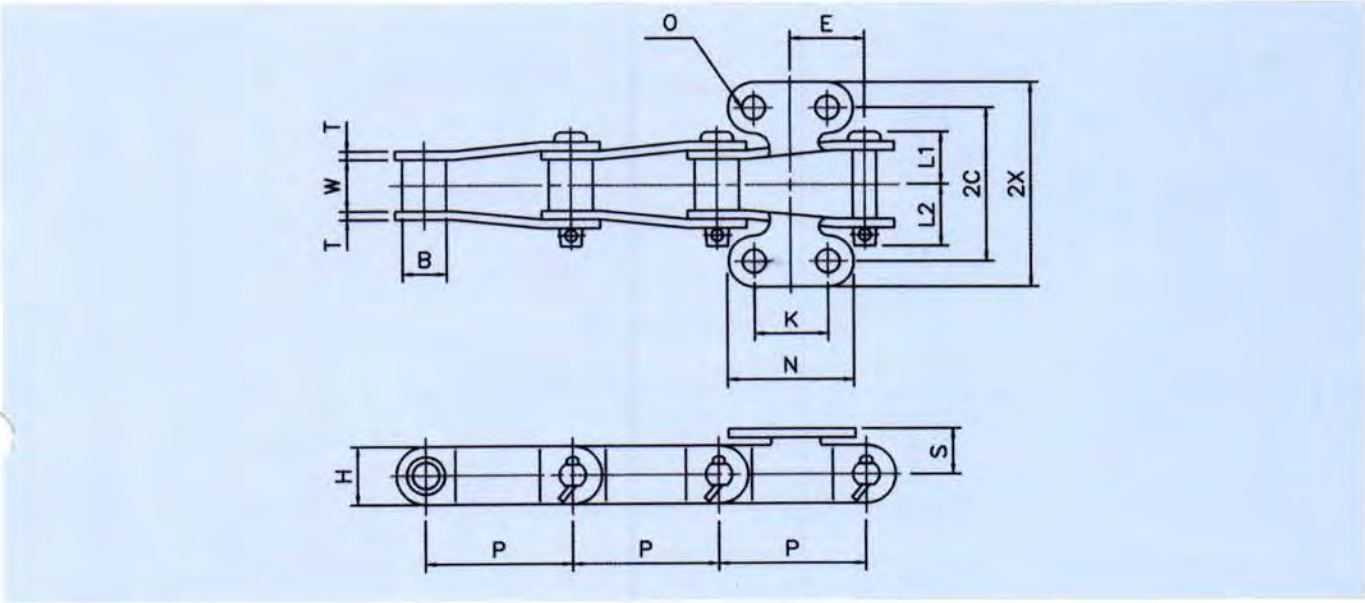

• Chains Without Attachment

Chain Standard	Pitch P	Bush Bore B	Inner Width W	Pin			H	T	Approx. Weight (kg/m)	Average Ultimate Strength (kg)
				D	L_1	L_2				
# 4103 B	78.11	31	29	19.1	38	43	38.1	7.9	13.4	10,000

• K-2 Attachment

Chain Standard	P	S	2C	2X	N	K	E	O	T	Additional Weight (kg/pc)
# 4103 B	78.11	26	104.8	138	67	38.2	38.9	14	7.9	0.43

• B : # 488 B K_2 ATTACHMENT

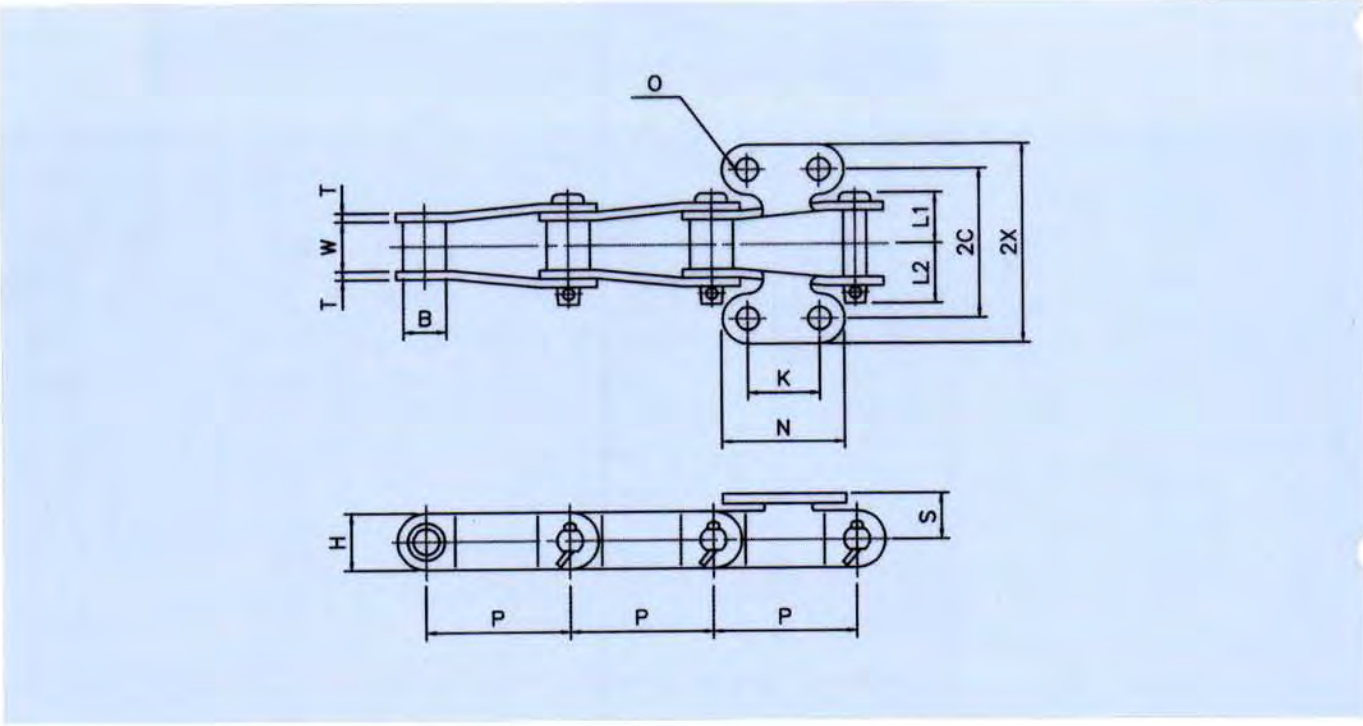

• Chains Without Attachment

Chain Standard	Pitch **P**	Bush Bore **B**	Inner Width **W**	Pin			H	T	Approx. Weight (kg/m)	Average Ultimate Strength (kg)
				D	L_1	L_2				
# 488 B	66.27	22.2	27	11.1	31.5	36.7	28.6	6.3	8.36	8,000

• K-2 Attachment

Chain Standard	P	S	2C	2X	N	K	T	O	Additional Weight (kg/pc)
# 488 B	66.27	20	90	114	55	32	6.3	10	0.28

• C : # 710 B K_2 ATT

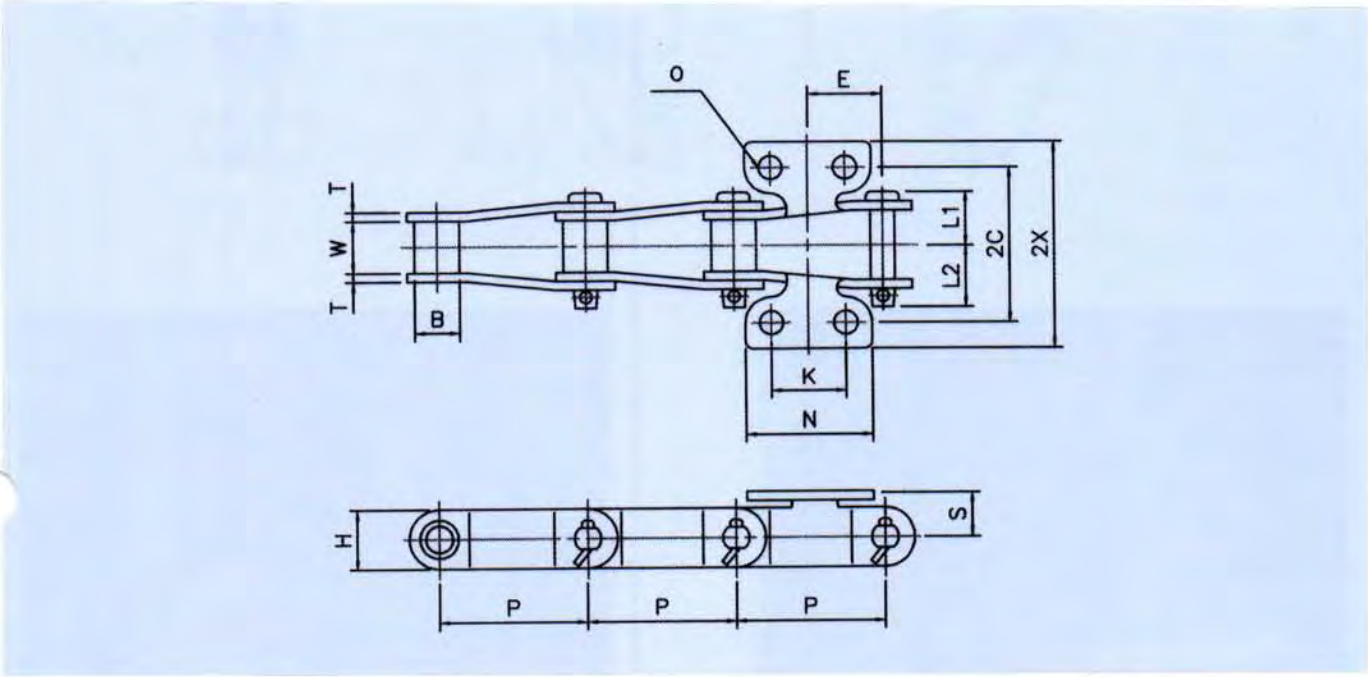

• Chains Without Attachment

Chain Standard	Pitch **P**	Bush Bore **B**	Inner Width **W**	Pin			H	T	Approx. Weight (kg/m)	Average Ultimate Strength (kg)
				D	L_1	L_2				
# 710 B	119.89	29	71.2	17	58	63	38	7.9	12	12,500

• K-2 Attachment

Chain Standard	P	S	2C	2X	N	K	E	O	T	Additional Weight (kg/pc)
# 710 B	119.89	23	160	191	85	58	60	14	7.9	0.64

20. BUTCHER FACILITIES CHAINS

Butcher facilities chains have similar functions to those of trolley conveyor chains.
All the parts plated with zinc for corrosion resistance, they are freely revolvable up and down, and right and left. Recently a lot of businesses use these chains to automate their facilities.
We can make it in different forms and with different functions. Please contact us before you place an order.

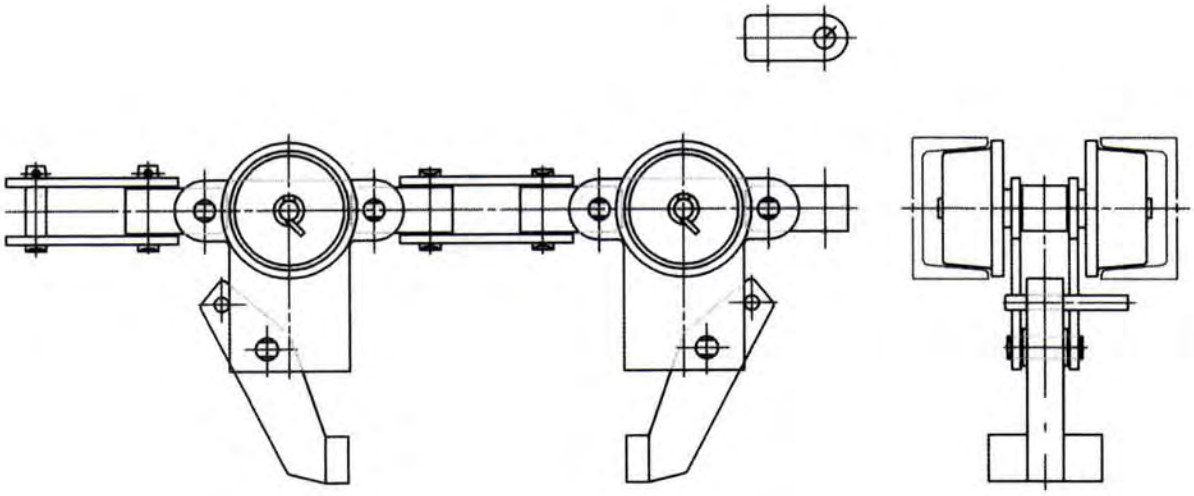

21. VB SLAT CONVEYOR CHAINS
(Automobile Assembly Line)

Slat conveyor chains are primarily used at automobile assembly plants. Side rollers are made into bearing and assembled to prevent chains from surging.
It is less expensive, stronger, and has longer life than pressure insertion of ball bearing into flange rollers.

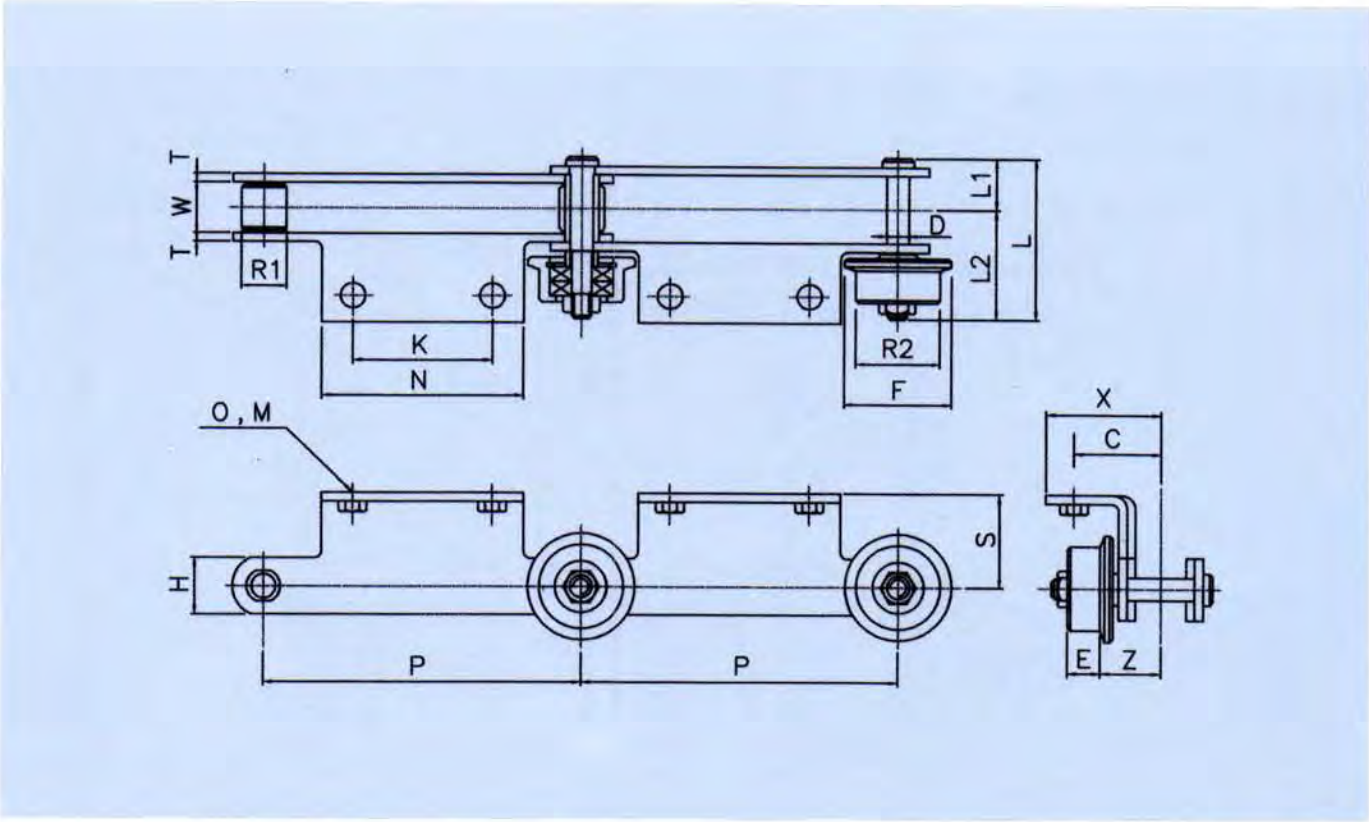

Chain No.	Average Ultimate Strength (kgf)	Pitch P	Inner Width W	Roller R_1	Roller R_2	Roller F	Pin D	Pin L	Pin L_1	Pin L_2	Pin E	Pin Z	Link Plate T	Link Plate H	Attachment S	Attachment C	Attachment X	Attachment N	Attachment K	Attachment O	Attachment M	Weight (kg/m)
NK13150VB	15,000	150	31.3	31.8	52	65	15.9	111	36.45	74.55	20	36.1	7	38.1	75	60	82	90	60	12	M10	13
NK13200VB		200																140	80			12.1
NK13250VB		250																190	140			11.5
NK13300VB		300																230	180			10.9
NK20200VB	24,000	200	40	40.1	68	84	21	132.3	43.8	88.5	25	49.3	9	50.8	80	60	82	120	80	12	M10	18.6
NK20250VB		250																180	140			18.5
NK20300VB		300																230	180			17.8

22. FS Slat Conveyor Chains (Automobile Shower Line)

FS slat conveyor chains are used at automobile shower lines to test waterproofing. With plates made of Cr-plated S45C, and pins, bushes, and rollers made of 13Cr stainless steel, these chains are strong against humidity. Nipple may be attached to the pinhead to grease for smooth operation.

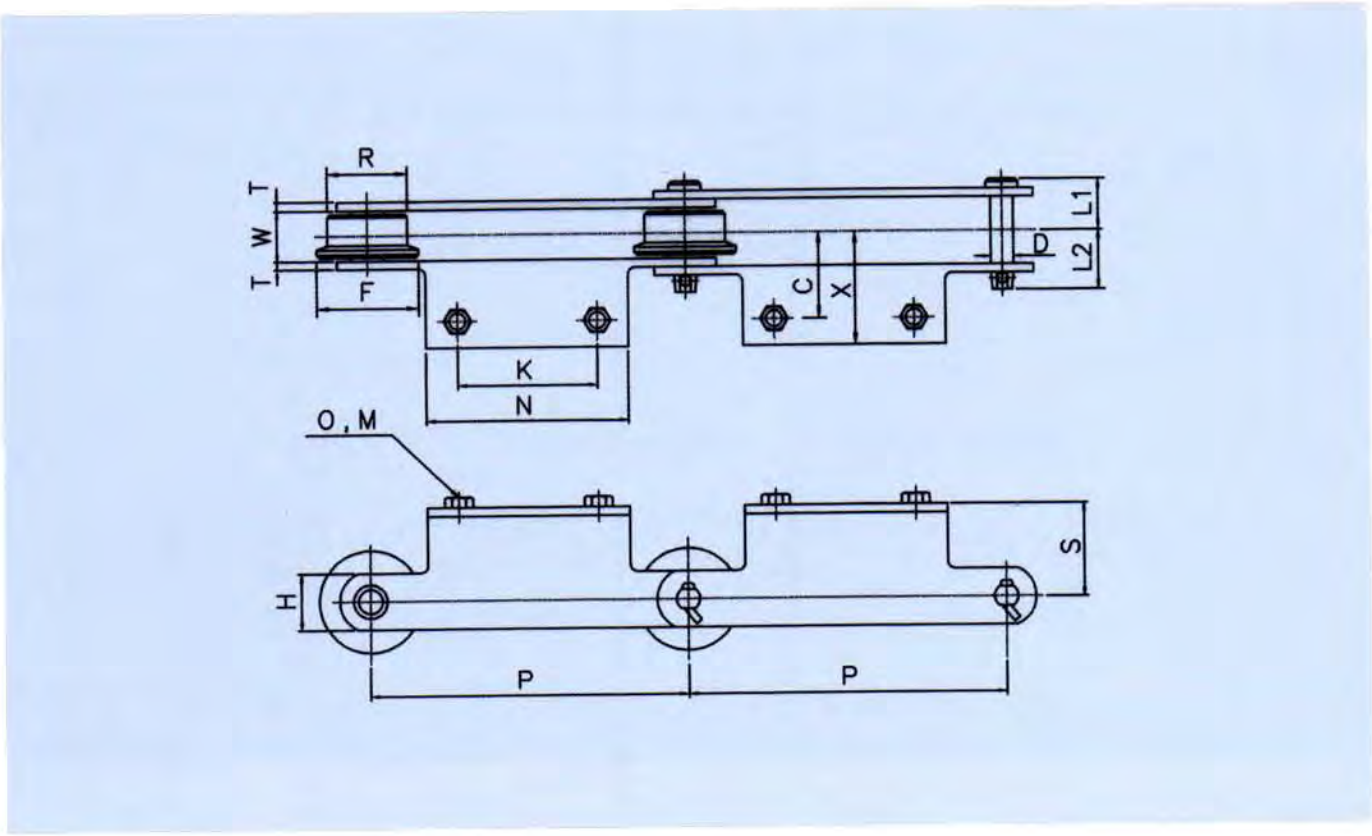

Chain No.	Average Ultimate Strength (kgf)	Pitch P	Inner Width W	Roller		Pin			Link Plate		Attachment							Weight (kg/m)
				F	R	D	L_1	L_2	T	H	S	C	X	N	K	O	M	
NK13150FS	15,000	150	31.3	65	50.8	15.9	35.25	42.65	7	38.1	75	60	82	90	60	12	M10	11.7
NK13200FS		200												140	80			11.1
NK13250FS		250												190	140			10.7
NK13300FS		300												230	180			10.3
NK20200FS	24,000	200	40	80	65	21	43.6	53.1	9	50.8	80	60	82	120	80	12	M10	15.6
NK20250FS		250												180	140			16
NK20300FS		300												230	180			15.8

23. SKID CHAINS FOR AUTOMOBILE LINES

These chains mainly used at automobile painting and assembly lines are excellent in precision, shock proofing, corrosion resistance, and abrasion resistance.
Varied attachments may be employed according to uses.

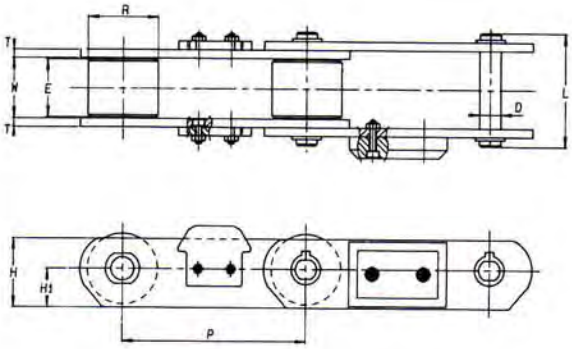

mm

Chain No.	Pitch P	Average Ultimate Strength(kgf)	Roller		Inner Width of Link W	Plate			Attachment			Pin	
			R	E		T	H_1	H_2	K	N	B	D	L
P 160	160	22,000	60	35	38	6	25	35	45	90	50	22	83

■ Examples of Attachments

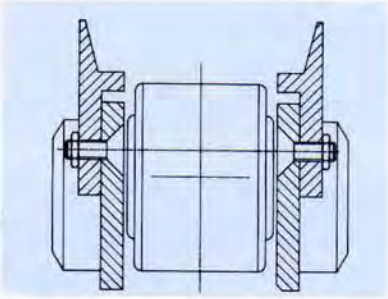

For Suspension

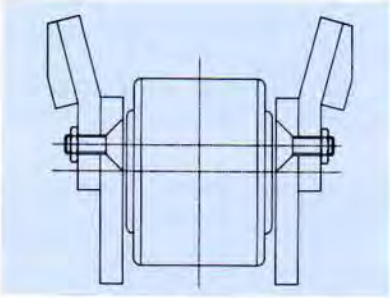

For Buffer

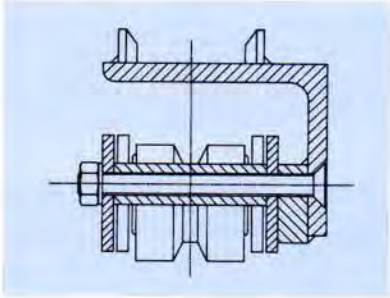

Booth

24. BC-TYPE HIGH-SPEED BUCKET ELEVATOR CHAINS

We realized speeding up of bucket elevators. These chains used to convey powdery matters are highly wearproof, shockproof, and fatigue-resistant.

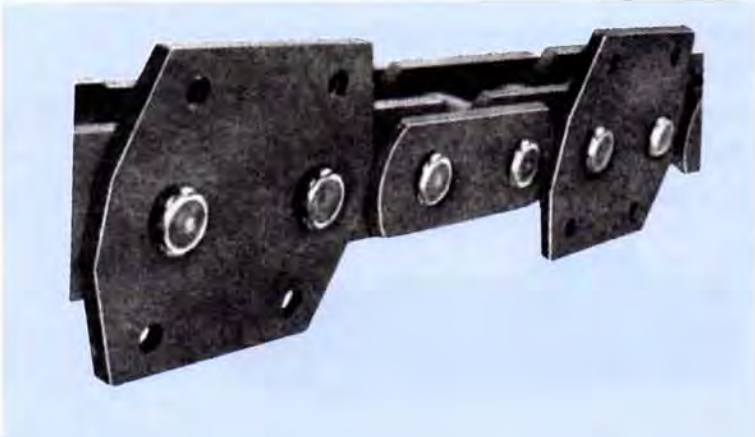

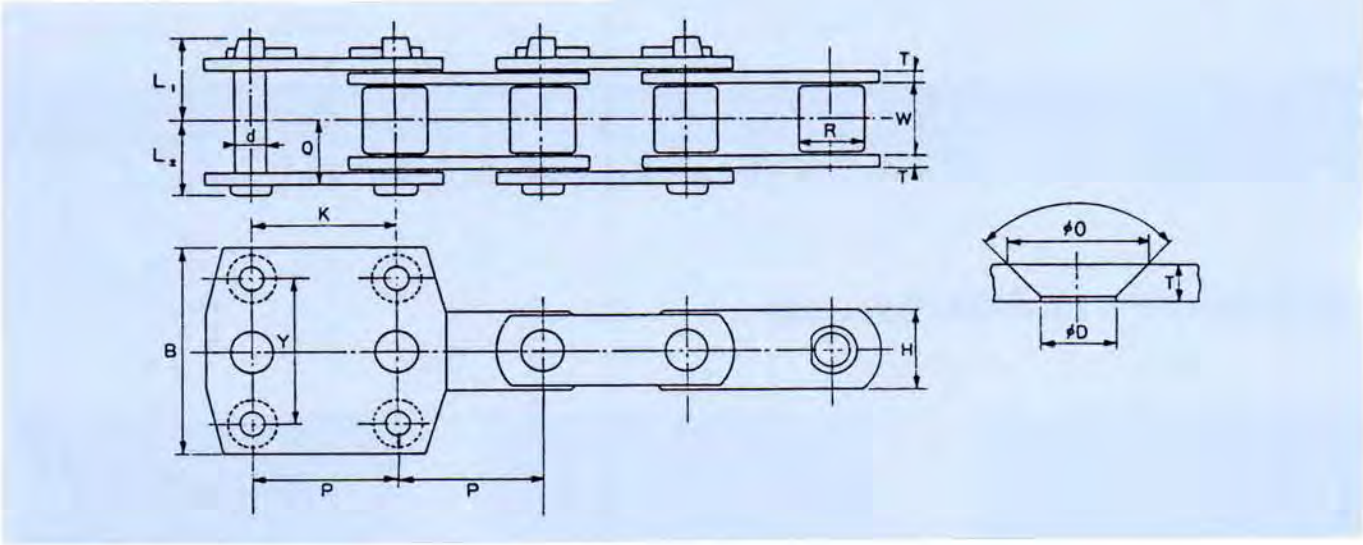

(mm)

Chain No.	Average Ultimate Strength (kgf)	Pitch P	Inner Width W	Diameter R	Pin d	Pin L_1	Pin L_2	Link Plate T	Link Plate H	Attachment K	Attachment Y	Attachment B	Attachment D	Attachment O	Attachment Q	Bolt	Approx. Weight Attachment	Approx. Weight G. Attachment
BC23100M	23,000	100	51.8	44.5	19.05	59.8	51.7	9	50	100	105	150	18	33	45.5	M16	17.5	20.4
BC32100M	32,000	100	57.6	50.8	22.2	62.8	55.7	9	65	100	105	150	18	33	48.5	M16	24.7	27.3
BC35Z100M	33,000	100	51.8	44.5	22.2	60.2	53.8	9	57	100	105	150	18	33	45.5	M16	19.0	21.7
BC50Z100M	50,000	100	57.6	50.8	25.4	64.2	57.3	9	75	100	105	150	18	33	48.5	M16	26.2	28.6
BC50Z125M		125								125	130	180					23.0	26.1
BC75Z125M	95,000	125	67.4	63.5	31.75	78.0	70.0	12.7	90	125	130	180	18	33	60	M16	41.9	46.1
BC75Z150M		150								150	170	220					37.6	42.7
BC75Z175M		175								175	180	230					34.5	39.7
BC100Z125M	100,000	125	75	70	35	90.8	83.2	16	100	125	130	180	18	33	72	M16	63.3	68.1
BC100Z150M		150								150	170	230	22	39		M20	56.7	63.9
BC100Z175M		175								175	180	240					52.0	59.3
BC120Z125M	120,000	125	82.5	75	38.5	95.5	88.0	16	115	125	150	200	18	33	76	M16	74.6	79.8
BC120Z150M		150								150	170	230	22	39		M20	68.3	75.1
BC120Z175M		175								175	180	240					62.5	69.4
BC140Z150M	140,000	150	85	82	41.75	99.3	90.2	16	125	150	170	230	22	39	77	M20	81.3	87.8
BC140Z175M		175								175	180	250	26	42.2		M24	74.0	81.1
BC60Z175M	160,000	175	92.5	86	44.5	110.3	101.2	19	130	175	180	250	26	42.2	87	M24	91.6	99.9
BC200Z175M	200,000	175	95	97	50.8	114.0	103.5	19	150	175	195	260	26	42.2	88.5	M24	119.3	134.2

25. APRON CONVEYOR CHAINS

Apron conveyor chains are hinge plate-type chains to convey chips from machine tools.
Offset side attachments to apron and hinge plates where chips are placed allow for conveyance of small chips as well.
Specifications may change as required. Please contact our Technology Department for more information.

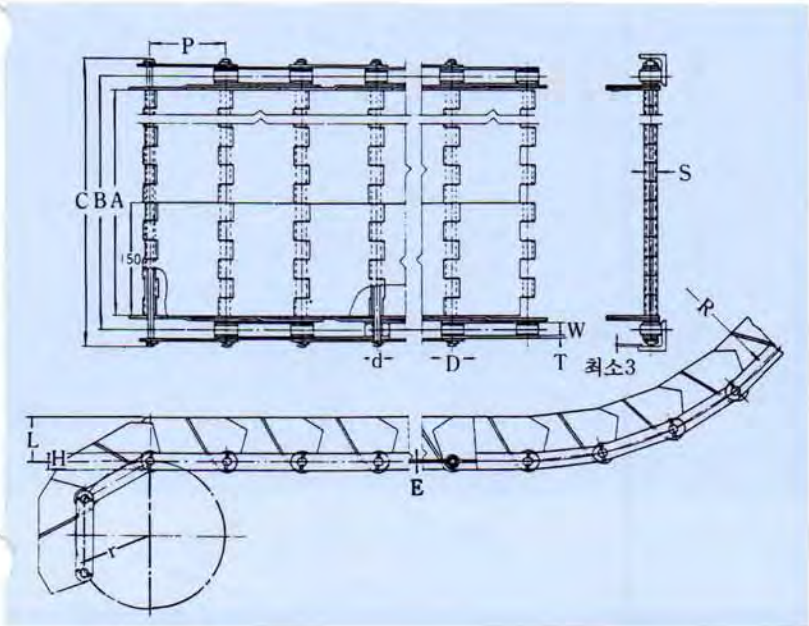

Chain No.	Effective Width of Apron A	Central Distance of Stair Chain B	Outer Width C	Height of Side Wing L	Thickness of Hinge Plate E	Outer Diameter of Hinge S	Stair Chain No.	Stair Chain Pitch P	Stair Chain Pin Diameter d	Stair Chain Roller Diameter D	Stair Chain RollerLink Inner Width W	Stair Chain Link Plate Width H	Stair Chain Link Plate Thickness T	Upper Minimum Radius of Curvature R	Lower Minimum Radius of Curvature r	Allowable Load (kgf)	Approx. Weight (kg/m)
AC3075 – 150	150	188.4	227.4	40	2.0	16.4	BC03075-R	75	7.94	31.75	16.1	22	3.2	300	75	900	13.0
AC3075 – 300	300	338.4	377.4														17.5
AC3075 – 450	450	488.4	527.4														22.4
AC3100 – 150	150	188.4	227.4	60	2.0	16.4	BC03100-R	100	7.94	31.75	16.1	22	3.2	450	100	900	12.7
AC3100 – 300	300	338.4	377.4														16.9
AC3100 – 450	450	488.4	527.4														21.1
AC5150 – 150	150	200.4	259.6	80	3.2	26.0	BC05150-R	150	11.1	40	22	32	4.5	900	150	2,000	18.8
AC5150 – 300	300	350.4	409.6														25.7
AC5150 – 450	450	500.4	559.6														22.2
AC5150 – 600	600	650.4	709.6														39.9
AC5150 – 750	750	800.4	859.6														46.3

26. CHAINS FOR REFUSE DISPOSAL PLANTS

These chains are used for scrappers, flows, slats, and conveyors to carry incinerated ashes at refuse disposal plants.
We also produce special attachments for these chains.

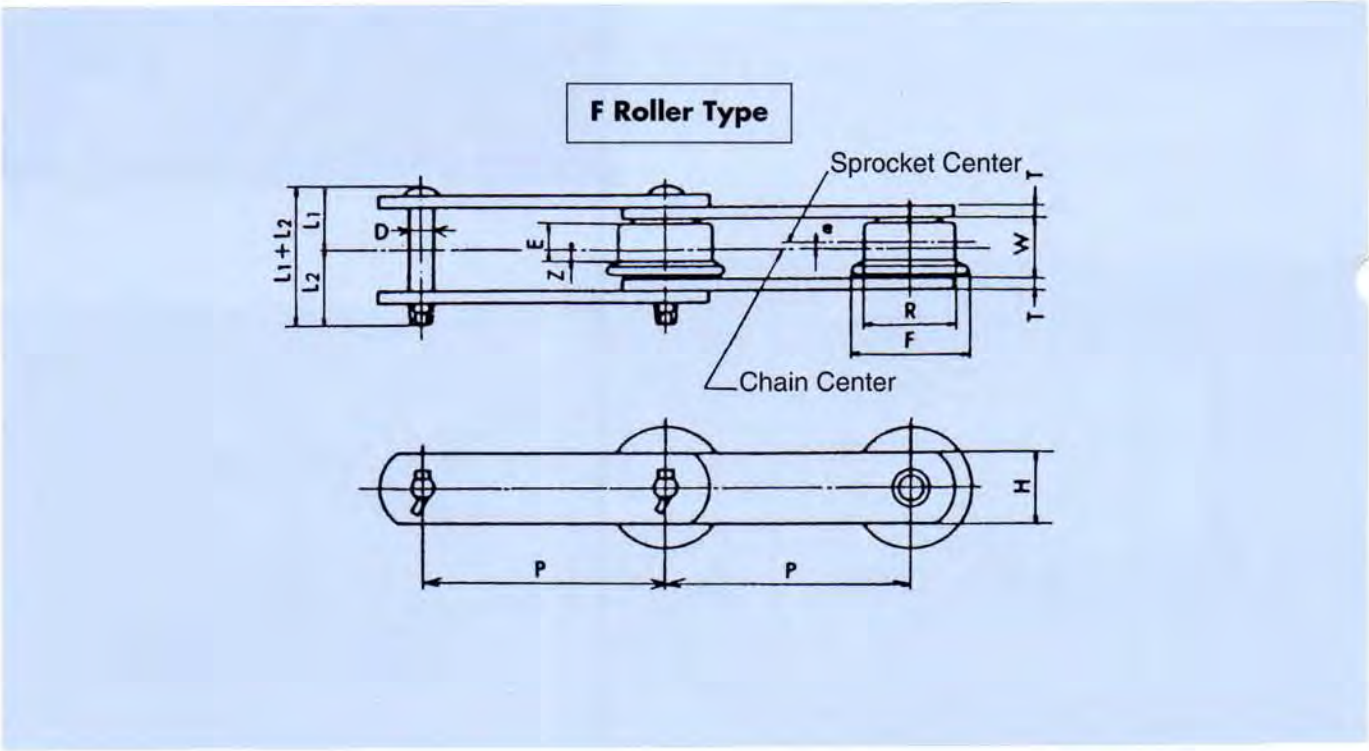

Chain No.	Pitch P	Inner Width W	F Roller					Pin			Link Plate		Approx. Weight (kg/m)	Average Ultimate Strength (kgf)
			R	F	E	e	Z	D	L_1	L_2	H	T		
BC10125F	125	30	50.8	65	20	3	7	14.3	32.7	39.2	38.1	6.3	9.0	11,500
BC10150F	150												8.1	
BC12200F	200	37.1	65	80	24	4	8	15.9	39.95	46.45	44.5	7.9	11.9	19,000
BC12250F	250												10.6	
BC17200F	200	51.4	80	100	34	5	12	19.05	51.5	60	50.8	9.5	19.8	25,000
BC17250F	250												17.3	
BC17300F	300												15.7	
BC26250F	250	57.2	100	125	38	6	13	22.2	55.2	62.7	63.5	9.5	26.2	32,000
BC26300F	300												23.6	
BC36300F	300	66.7	125	150	42	7	14	25.4	67.55	75.55	76.2	12.7	40.1	48,500
BC36450F	450												31.9	

■ Trolley Chains (TR348, 458, 678)

● Features

· Enables you to continue production and shortens manufacturing process.
· Conveys heavy products economically.
· Easy to check, repair, lubricate because chains are exposed.
· Can use the whole space to convey goods at will.

● Brief Diagram

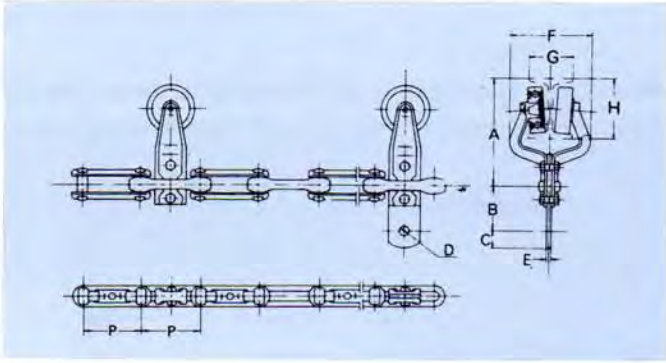

● Specifications

Specifications \ Chain No.		TR - 348	TR - 458	TR - 678
Chain	Pitch	76.2mm	101.6mm	152.4mm
	Average Ultimate Strength	12,000kg	24,000kg	40,000kg
	Allowable Load	1,000kg	2,000kg	3,300kg
	Weight (kg/M)	3.4	4.6	9.0
Trolley	Weight (kg/pc)	1.2	2.4	8.8
Load Condition	Single Hanger (kg)	90	180	380
	Rod Bar (kg)	180	360	760
Standard Horizontal Curvature (mm)		600	600	600
Drive		CATERPILLAR TYPE		
Take-up		WEIGHT TYPE		
Rail		I t 75×75×5	I t 100×75×5	I t 150×75×5.5
Maximum Speed		15M/MIN		

Chain No.	P	A	B	C	D	E	F
TR - 348	76.2	138	80	16	13.5	6.3	122
TR - 458	101.6	183	73	27	14.3	9.0	137
TR - 678	152.4	252	73	32	16.3	18	183

■ Calculation for Trolley Conveyors

● Calculating TR Chain Tension

$$T = L \cdot f \cdot W_A + W_B(D_1 - D_2)$$

T=Chain Tension
L=Total Length of Line (m)
W_A=Average Unit Load(kg/m)
W_B=Actual Line Unit Load(kg/m)
D_1=Maximum Height of Actual Line (m)
D_2=Minimum Height of Actual Line (m)
f'=Coefficient of Travel Resistance

● Average Coefficient of Travel Resistance on the Entire Line: f'

Size of Conveyor	3″			4″		
Condition(Temperature) / Number of Turns	# 1 (0° ~120℃)	# 2 (120° ~160℃)	# 3 (160° ~200℃)	# 1 (0° ~120℃)	# 2 (120° ~160℃)	# 3 (160° ~200℃)
n= 5	0.024	0.033	0.045	0.017	0.024	0.032
n=10	0.026	0.038	0.055	0.019	0.028	0.039
n=15	0.028	0.045	0.069	0.020	0.033	0.049
n=25	0.031	0.053	0.087	0.022	0.039	0.062
n=25	0.034	0.063	0.111	0.024	0.047	0.079
n=30	0.038	0.075	0.143	0.027	0.056	0.102
μs	0.021	0.027	0.035	0.015	0.020	0.025
k	1.035	1.060	1.080	1.035	1.060	1.080

$$f' = \frac{\mu s \cdot k(k^n - 1)}{n(k-1)}$$

f: Average Coefficient of Travel Resistance on the Entire Line
μs: Coefficient of Travel Resistance on Straight Line Segment
k: Turn-Average Coefficient of Increase
n = Number of Turns
90° Horizontal Curve Turn n=1
180° Horizontal Curve Turn n=2
Vertical Curve n=2

● Calculating Required Motor Power

$$\text{Power Consumption (kw)} \fallingdotseq \frac{T \times V}{6120 \times 3} \times K$$

T: Chain Tension (kg°§f)
V: Highest Speed of Conveyor (m/min)
K: Coefficient of Starting (1.3)
η: Modulus of Machine (0.26)

$$\eta(0.62) = \underset{\text{(caterpillar)}}{0.95} \times \underset{\text{(worm-Reducer)}}{0.75} \times \underset{\text{(Roller Chain)}}{0.97} \times \underset{\text{(Cyclo Reducer)}}{0.9}$$

● Total Length of Horizontal Vertical Curve

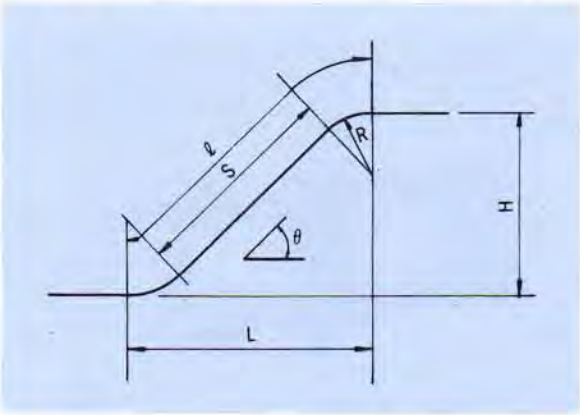

$$L=\left(\frac{1}{\tan\theta}\cdot H\right)+2\{\tan(\theta/2)R\}$$

$$S=\left(\frac{1}{\tan\theta}\cdot H\right)-2\{\tan(\theta/2)R\}$$

$$\ell=S+\frac{R\cdot\theta\cdot\pi}{90}$$

● Hanging Support Pitch

If conveyed goods pitch is more than 1/2 of support pitch, take it to be centralized load.
Take it to be even load if less than 1/3, and between two graphs if between 1/2 and 1/3.

*Note that this graph was made in consideration of the weight of the conveyor itself.
Calculate the weight of the goods to be conveyed and the hanger only.

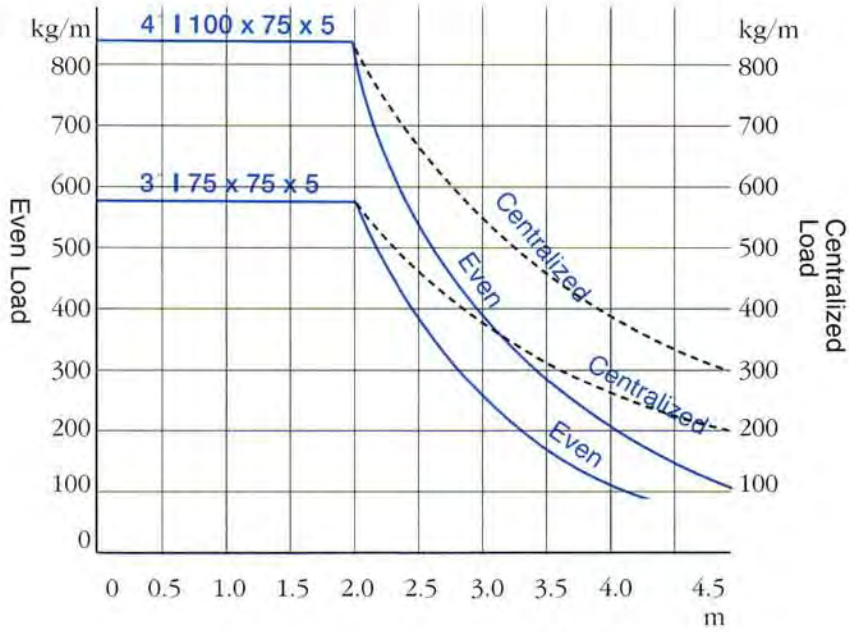

SAMLPES OF CONVEYOR CHAINS

Driving Chain

RO1602 AA

RO 3H

Flow Conveyor Chain

Bucket Elevator Chain

Water Treatment Plant Chain

P610R

ACS19152W SF4

■ Chains for Parking Building

Parking is one of the most serious problems in modern cities. These chains for parking towers were developed to solve the matter. Different sizes of chains are available in accordance with the size of parking buildings and the number of vehicles.
Be sure to contact us when you design.

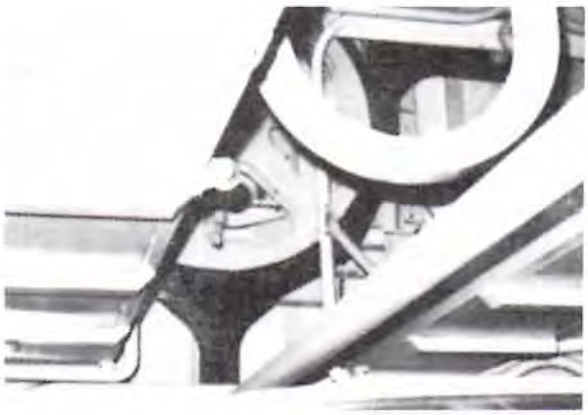

• Chains for Parking Buildings

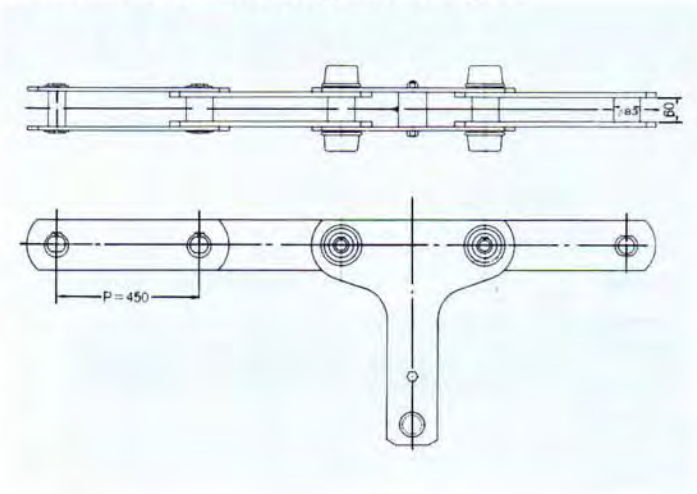

■ Escalator Chains

These chains for escalators in such places as department stores must be precisely manufactured because they are used by people.

• Escalator Chains

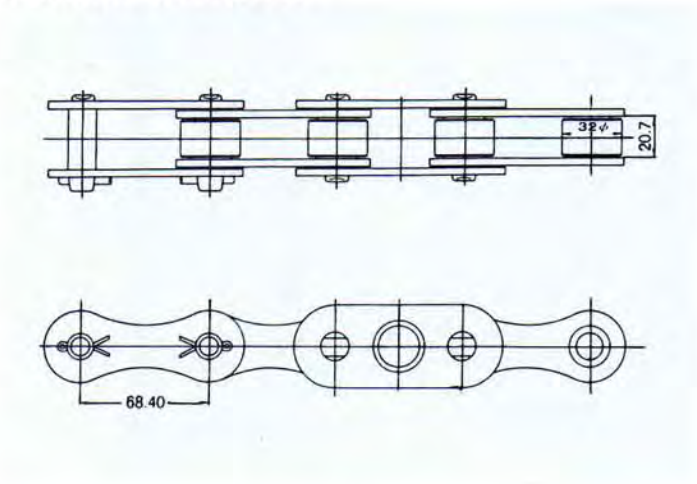

29. Standard Designs of Sprocket Teeth

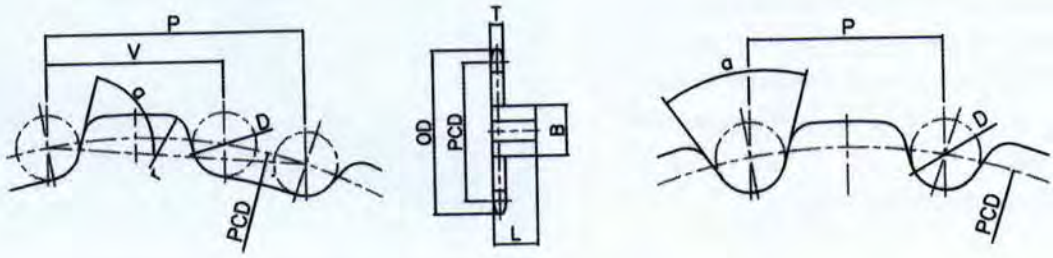

$$P.C.D = \frac{P}{SIN(180^\circ/N)}$$ (mark up to 0.1mm)

O.D=P.C.D+0.7R

D=R+C

K-ATT should be designed.

Values C			
	Major Steel Teeth	Precision Short Teeth	Machine Made Teeth
Up to 50	3	2	1
Over 50 - 100	4	2	1
Over 100	5	3	2
0.1mm and less	rounded off	rounded off	2 or less

V= { 3D(if R<H) ---------- Normal(S.M Roller)
{ 2D(if R>H) ---------- R.F Roller

But, if V≦P - 5

α = 80° (Pressure Angle 10°) N≦9

α = N≧10

● Table α (tooth angles)

Teeth Number	α	Teeth Number	α
6	79.3	19	68.8
7	77.1	20	68.6
8	75.5	21	68.4
9	74.2	22	68.2
10	73.2	23	68.0
11	72.9	24	67.8
12	71.7	25	67.7
13	71.1	26	67.5
14	70.6	27	67.4
15	70.1	28	67.3
16	69.8	29	67.2
17	69.4	29	67.1
18	69.1		

$$\gamma = \frac{O.D-P.C.D}{2}$$ ---------- In principle

L=(1.1 - 1.5) ---------- Generally 0.3d

B=εd+2b+5

	FC		SC, SF, SS	
	min	nor	min	nor
ε	1.6	1.8	1.45	1.65

T = 0.75W - 0.8W

GLOSSARY

PCD : pitch diameter (mm)

O.D : outside diameter of the sprocket (mm)

R : outside diameter of the riller (mm)

N : number of teeth

P : chain pitch (mm)

r : round outside diameter of the sprocket

T : thickness of the sprocket (mm)

L : length of boss

B : outside diameter of boss

d : inside diameter of boss

b : height of the key(the boss side)

w : inner width of chains

H : height of the plate